GROUND FORCE WORLDWIDE
WORLD'S FINEST MINE SUPPORT EQUIPMENT

OPERATION & MAINTENANCE MANUAL

WATER PULL

SERIAL # 717H01 • 12,000 GALLONS (45,425 LITERS)

Ground Force Worldwide
6001 E. Seltice Way
Post Falls, Idaho 83854
1 (208) 664-9291
info@gfworldwide.com | www.gfworldwide.com

ORIGINAL INSTRUCTIONS

Printing History: First Edition – NOVEMBER 2021

REVISION	DATE	APPROVED	DESCRIPTION
0	11/23/2021	JWEST	Initial release

Valued Ground Force customer:

Thank you for selecting **Ground Force Worldwide** as your mine equipment supplier. Our business is based on providing our customers with innovative solutions, manufactured of high quality, heavy-duty materials designed to out-perform in the most extreme applications.

Upon purchase of your equipment, we strive to provide superior service throughout the life of your product. Our **Parts & Product Support Department** is here to assist you by answering technical questions, troubleshooting your equipment when needed, and expediting your parts ordering. We stock the most commonly used parts for your equipment and can ship overnight, when needed. Our Parts and Product Support Representatives (PPSRs) are available 24/7.

Ground Force Worldwide proudly provides superior customer service through the life of your equipment. Call us anytime at 1 (208) 664-9291, or e-mail service@gfworldwide.com, and let us assist you.

Sincerely,
Ground Force Worldwide
Documentation Department

CONTACT US

Ground Force Manufacturing, LLC
6001 E. Seltice Way
Post Falls, ID 83854 USA

Phone: +1 (208) 664-9291
Fax: +1 (208) 664-9475

Parts & Product Support E-mail: PPSR@gfworldwide.com
Service Department E-mail: Service@gfworldwide.com
General E-mail: info@gfworldwide.com
Web: www.gfworldwide.com

GROUND FORCE WORLDWIDE
WORLD'S FINEST MINE SUPPORT EQUIPMENT

OPERATION & MAINTENANCE MANUAL

INTRODUCTION

CONTENTS

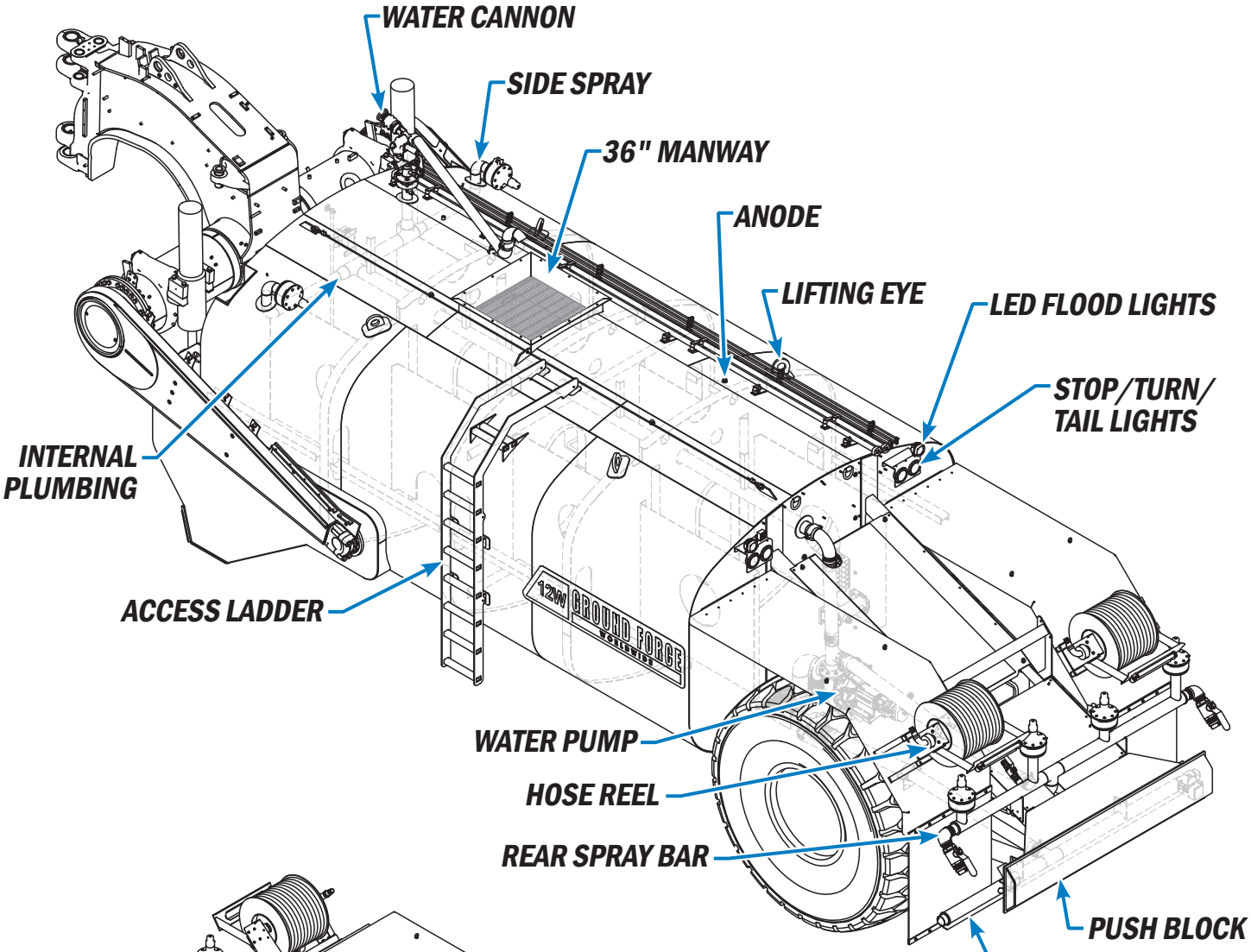
WATER CANNON
SIDE SPRAY
36" MANWAY
ANODE
LIFTING EYE
LED FLOOD LIGHTS
STOP/TURN/
TAIL LIGHTS
INTERNAL
PLUMBING
ACCESS LADDER
12W GROUND FORCE WORLDWIDE
WATER PUMP
HOSE REEL
REAR SPRAY BAR
PUSH BLOCK
GRAVITY DRIP BAR

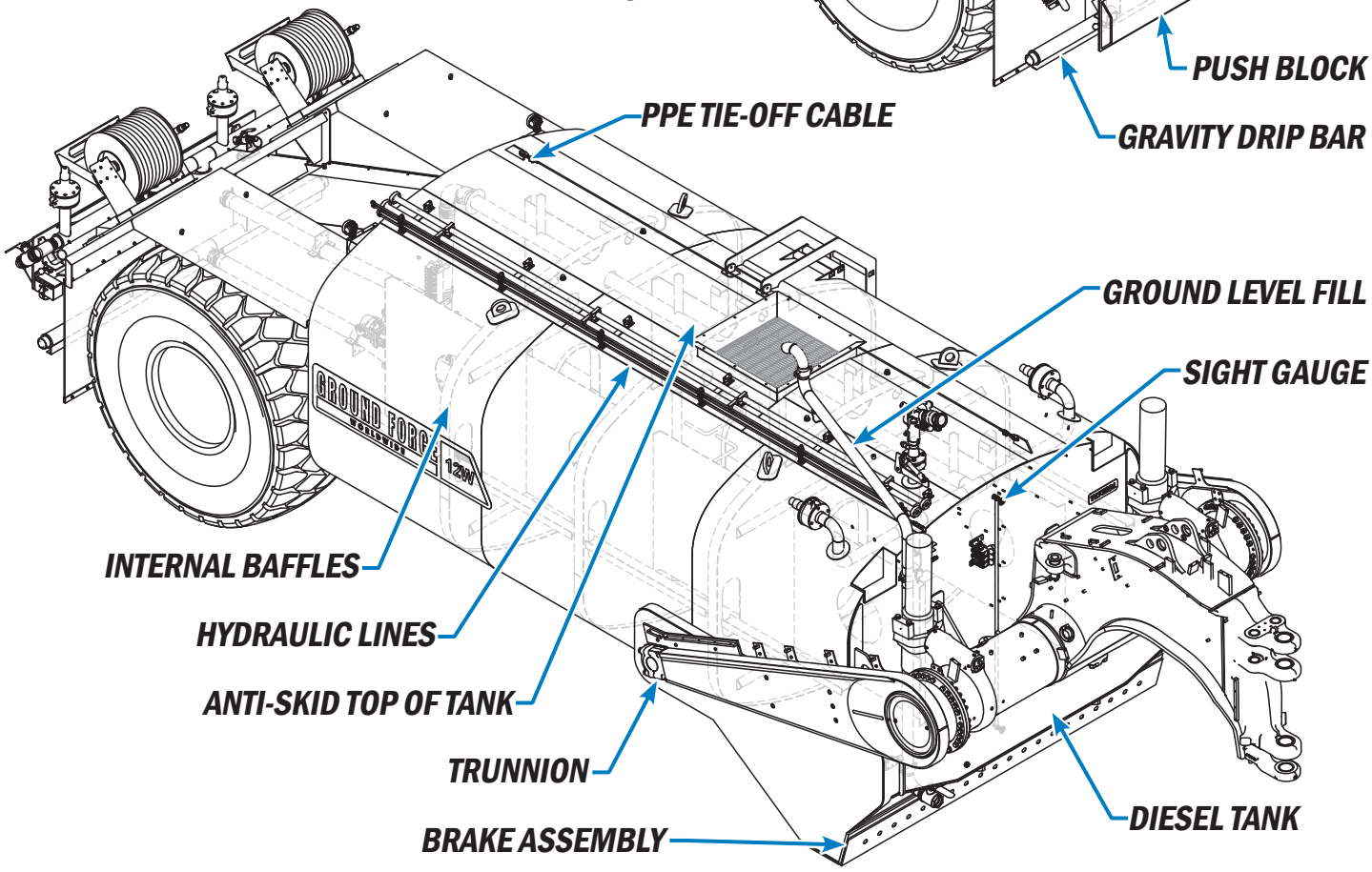
PPE TIE-OFF CABLE
GROUND LEVEL FILL
SIGHT GAUGE
GROUND FORCE WORLDWIDE 12W
INTERNAL BAFFLES
HYDRAULIC LINES
ANTI-SKID TOP OF TANK
TRUNNION
BRAKE ASSEMBLY
DIESEL TANK

SPECIFICATIONS

The Ground Force Worldwide Water Tanker is a heavy-duty, custom-engineered water delivery tank, offering solutions for dust suppression, fire fighting and general water truck needs.

Ground Force water tanks are engineered with an internal endoskeleton and dual-radius semi-elliptical design. This allows for an optimal center of gravity while providing the strength needed for the water tank to last in tough conditions. Ground Force water tanks are fully baffled to break up water flow and increase stability.

⚠ WARNING

Do not operate the Ground Force water tank in unsafe conditions. Do not operate the Ground Force water tank in a manner that violates local and site-specific laws and regulations.

717H01

- 12,000-gallon tank for 631K water-pull conversion - (BSDA) new tank build

SCOPE OF WORK

- 12,000-gallon water tank to convert a new 631K tractor to a water pull
- For a Ground Force-supplied new Caterpillar 631K Prime Mover tractor with two tires (tractor side) and Caterpillar 631K - complete rear wheel and brake group, draft arms and related Caterpillar parts kit to complete conversion

GFM WATER TANK SPECIFICATION

- 12,000-gallon water tank with T1 mold-board
- Brake Saver Drop Arm (BSDA) design
- Additional steel plate on shell bottom
- Ground Force baffling system and endo-skeleton
- GFM to chamfer all sharp edges inside of the tank so the interior coating can properly adhere
- GFM to cap the ends of the transverse baffle channel supports so water cannot enter and corrode
- 36" square manway with trash screen/safety grate
- PPE safety tie-off cable, entire length top of tank
- Anti-skid, top of tank
- Sump to be elevated to help prevent damage from debris
- (2) D-ring tie-offs at rear of tank
- Ladder with safety rail, side-mounted
- Trunnions for draft arm connection to tank
- Tank level sight tube with shut-off valves, installed on front head
- High performance (B4) stainless steel water pump
- Low level shut-off
- Stainless steel rear spray bar with (4) hydraulic-op staggered in-line valves with adjustable fan sprays; 3" NPT pipe couplers with plugs on each end of spray bar
- (2) 2-1/2" fire hose coupling, 3" brass ball valve at each side of rear spray bar
- Stainless steel ground-level hydrant fill 3" with legal air gap and bottom 90-degree elbow facing forward; includes brass ball valve at connection point
- Low-point manual drains on all water circuits
- Includes Ground Force WCS (Water Control System); WCS quick start guide
- Front-mounted 215-gallon diesel fuel tank
- New heavy-duty rear frame assembly w/ push block
- Painted Caterpillar yellow to match prime mover
- Rear structure mud flaps
- Rear LED turn/ tail/ stop lights
- Backup lights

ANODES (4)

- Installation of sacrificial (replaceable) anodes in tank for corrosion resistance

GROUND FORCE ENHANCED CORROSION-RESISTANT SPRAY PACKAGE

- All interior tank plumbing upgraded to stainless steel
- Rear spray bar upgraded to stainless steel
- Ground level hydrant fill plumbing to be stainless steel
- 4" stainless steel gravity dump bar
- (6) marine-grade alloy valves / spray heads included; (4) rear spray bar, (2) side sprays
- Maxi spray valve – hydraulic operated, part #MX80-DA-H-MK2

- Pump mounting plate upgraded to heavy-duty stainless steel
- Stainless steel water pump upgrade (B4)

4" STAINLESS STEEL GRAVITY DUMP BAR

- Width of tank, at rear
- 4" schedule 40 pipe with 3/4" holes on 6" centers
- Operated from cab

HYDRAULIC OPERATED SIDE SPRAY

- Side spray (2) located at upper quadrants - front of tank

(2) HYDRAULIC REWIND HOSE REELS

- (2) water hose reel with 100' x 1-1/2" hose and adjustable nozzle
- Mounted on the rear of the machine
- Includes manual in-line shut-off (isolator) valve
- Includes addition of high idle switch box
- Air blow-down and control valve for hose draining

NITRO WATER CANNON

- Hard-wired joystick control operation
- 500 GPM adjustable nozzle
- Includes automatic drain feature to eliminate standing water in Monitor pipe

(2) 24V LED UTILITY LIGHTS (USES BACKUP LIGHTS WITH DEDICATED SWITCH)

- (2) 24V LED rear-mounted sealed-beam work lights
- Include control switch/circuit protection in tractor cab
- TYRI 1313 or similar 7,000 Lumens

WATER LEVEL INDICATOR ELECTRIC

- In-cab water level indicator

AUTOMATED GREASING SYSTEM

- Groenwald Beka Twin 3.1 Automated Greasing System with 8-liter pump, in-cab display, and auxiliary grease points on Cat 631K water pull with 34 grease points
- Optional add-on, Groenwald Twin 3.1 24V , 8L automated grease pump F605338
- Optional add-on Groenwald Twin system parts kit (large) F198737

INTERIOR COATING

- Interior coating per spec provided by Skip Vernon CLT Inc
- NW Sandblast & Paint to sandblast the 12,000-gallon tank interior to the product preparation specification
- Sandblast the interior of the tank to an SSPC-SP10 near white metal
- Apply two coats of PPG Amerlock 2 Epoxy @ manufacturer's recommendation of 4-8 mils dft per coat
- Apply caulking on all skip welds prior to applying the second coat of epoxy (no additional cost)
- Have hold points for outside inspection QA after blast, each coat of epoxy and caulking

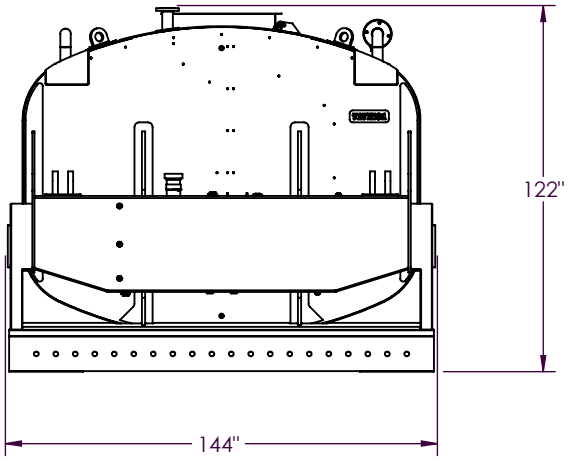

TANK ONLY SHIPPING INFORMATION		
WIDTH:	144"	
HEIGHT:	122"	
LENGTH:	412"	
WEIGHT: (APPROX)	37,000 LBS	
SHIPPING COMPANY TO SUPPLY THEIR OWN DUNNAGE		

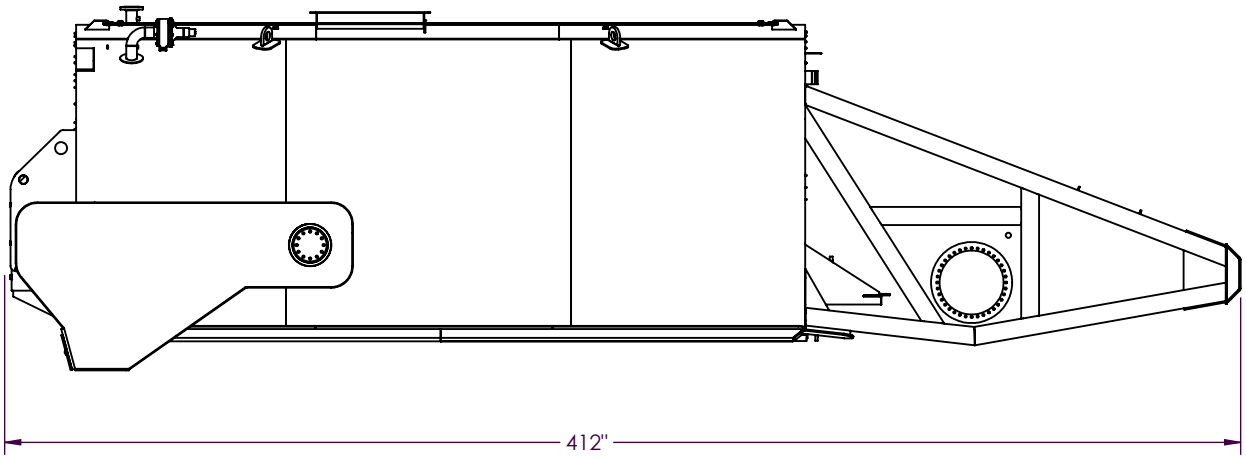

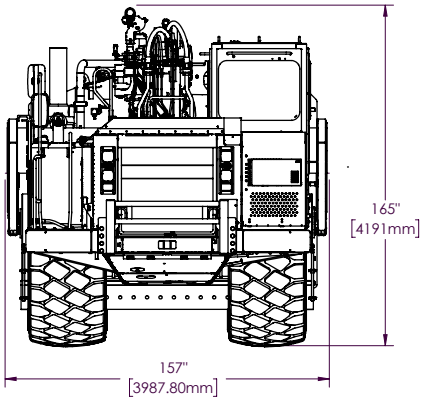

TRUCK SHIPPING INFORMATION		
WIDTH:	157"	3,988 mm
HEIGHT:	165"	4,191 mm
LENGTH:	683"	17,348 mm
WEIGHT: (APPROX)	112,000 LBS	50,802 kg
SHIPPING COMPANY TO SUPPLY THEIR OWN DUNNAGE		

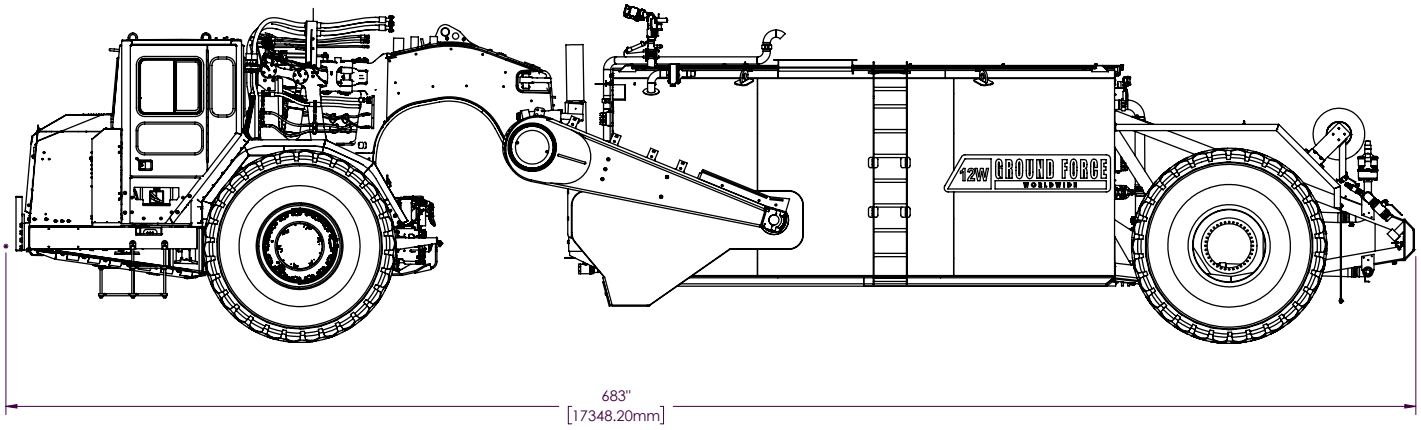

GROUND FORCE WORLDWIDE
WORLD'S FINEST MINE SUPPORT EQUIPMENT

OPERATION & MAINTENANCE MANUAL

SAFETY

This safety guide is provided by Ground Force Worldwide to assist you in making a safer workplace. Specific regulations at the site of operations supersede all basic recommendations provided in following sections.

For more information contact your national, state, or local authority. The following links are provided to assist you in compliance:

Occupational Safety and Health Administration
Mine Safety and Health Administration
Canadian Centre for Occupational Health and Safety
European Agency for Safety and Health at Work
Safe Work Australia

GUIDELINES

Equipment and vehicles must be maintained to be safe and reliable. Due to Ground Force Worldwide's global presence and distribution, and the myriad of local, state, and federal regulations, it is impractical to provide specific details of these regulations. The following are basic guide lines, which do NOT supersede on-site requirements and regulations, which MUST be followed.

- Ensure that ALL operators have been trained on the equipment they use and operate.
- Check vehicles at the beginning of each shift to ensure that parts, equipment and accessories are in safe operating condition. Repair or replace any defective parts or equipment prior to use.
- Ensure the service, emergency and park brake systems are operational. Verify audible backup alarm system is operational and working. Headlights, tail lights, and brake lights MUST be operational. Verify the windshield is clear and the windshield wipers are operational.
- DO NOT operate the vehicle in reverse with an obstructed rear view, unless it has a signal alarm capable of being heard above ambient noise levels or a signal observer indicates that it is safe to move vehicle. Some operational areas require a spotter at all times.
- Equipment should have roll-over protection, and protection from falling debris as required by law.
- Ensure that vehicles used to transport workers have seat belts, firmly secured and adequate for the number of workers to be carried or transported.
- DO NOT modify the equipment's capacity or safety features without written approval from the Ground Force Mfg. Engineering Department.
- Prior to permitting equipment or vehicles onto an access roadway or grade, verify that the roadway or grade is constructed and maintained to safely accommodate the equipment, vehicles and loads involved.
- Vehicles and equipment loaded from the top must have cab shields or canopies to protect the operator while loading.
- Verify the Pre-Shift Inspection has been completed and signed off.
- Based on site conditions, you may choose to have the chassis supplier lock out the top gears to prevent excessive speed.

⚠ WARNING

DO NOT attempt to use this equipment until you have thoroughly read this manual. It includes important safety precautions, detailed starting, operating and maintenance instructions, and parts lists.

2.1 READ INSTRUCTIONS

- Read and follow the Owner's Manual carefully before installing, operating, or servicing equipment. Read safety information at the beginning of the manual and in each section. Heed warning labels on equipment
- Use only genuine replacement parts from the manufacturer
- Perform maintenance and service according to the owner's manual
- ALWAYS follow national, state, and local codes

2.2 GENERAL SAFETY HAZARDS

- Always ensure vehicle is CLEAR of personnel before starting vehicle
- Always use wheel chocks when servicing or working on vehicle

2.3 ENGINE EXHAUST CAN KILL

- Operate in open, well-ventilated areas or vent exhaust outside

2.4 MOVING PARTS CAN INJURE OR KILL

- Do not operate with doors open or guards off or removed
- Stop engine before servicing
- Keep hands, hair, loose clothing and tools away from moving parts and machinery

2.5 BATTERY FUMES AND EXPLOSIONS

- Follow battery manufacturer's instructions when working on or near a battery
- Stop engine before disconnecting or connecting battery cables, battery charging cables, or servicing battery
- Always wear a face shield, rubber gloves and protective clothing when working on battery
- Batteries produce explosive gases during normal operation and when being charged. Keep sparks, flames, cigarettes and other ignition sources away from batteries
- Observe correct polarity (+ and -) on batteries
- Disconnect negative cable (-) first and reconnect negative (-) cable last
- DO NOT tip battery
- Replace battery if damaged
- Do NOT charge a frozen battery
- Do NOT charge battery in a closed area or where ventilation is restricted
- In case of battery acid getting on face, on skin, or in eyes, flush immediately with water for 5 minutes and seek medical attention as soon as possible

2.6 FIRE HAZARDS

- Stop engine while fueling
- DO NOT smoke while fueling
- DO NOT leave nozzle unattended while fueling
- Wipe up spilled fuel and allow fumes to clear before starting engine
- DO NOT overfill the fuel tank, fuel expansion may cause overflow

2.7 ELECTRICAL SHOCK CAN KILL

- DO NOT touch electrically live parts with skin or wet clothing
- Insulate yourself from work and use safety ground
- Always wear dry insulated gloves when working on electrical equipment
- Always lockout/tagout equipment before performing electrical work

2.8 FALL HAZARDS

- Equipment operators and maintenance personnel are susceptible to falls from equipment during repair and servicing. Prevent falls and slips by following these guidelines:

- ON-SITE FALL HAZARD requirements supersede all of the guidelines listed below. Closely follow on-site safety rules.
- Know and identify what slip, fall and trip hazards are, and what preventative measures are required
- Survey work area on and around equipment for slip and fall hazards and remove hazards from area
- Never jump from equipment to the ground
- Use three points of contact when climbing equipment
- Where there is a danger of falling use a FALL PROTECTION SYSTEM per OSHA AND MSHA requirements.
- Always follow national, state and local codes: https://www.osha.gov/SLTC/fallprotection/

2.9 PINCH POINT HAZARDS

- Never place yourself between a piece of heavy equipment or machinery and an immovable object
- Never work within the swing radius of rotating equipment

- Always work at a safe distance from equipment
- Caught-in hazards exist when workers remove or disable guards. Use extra caution when removing this safety equipment as required for servicing
- Never place your hands or body near moving parts
- Gloves, long sleeve shirts, hair, and loose fitting clothing can be hazardous if caught in moving parts
- Never exceed maximum load limits according to the equipment and machinery specifications
- All workers should wear bright protective clothing. Signs that are highly visible should be set up in a way to warn and discourage nonworkers from entering site
- Never forget one simple rule: PARKING BRAKES. They are easy to operate and can save lives
- Always use wheel chocks when working on or near a vehicle
- Always verify that vehicle is clear before starting

2.10 LOCK-OUT / TAG-OUT

1. IDENTIFY the types of energy sources used, potential hazards, and control devices.
2. NOTIFY all affected employees.
3. TURN OFF all operating controls.
4. LOCATE all energy sources
5. ISOLATE all energy sources by blocking, bleeding and ventilating stored energy as found in springs, hydraulic systems, electrical systems and pneumatic systems.
6. LOCK-OUT all switches and energy controls in the OFF or SAFE position.
7. TEST operating controls. Put all controls in ON position. Be sure no one can get hurt before testing.
8. RETURN all operating controls to the OFF position.
9. PERFORM required task.
10. REMOVE lock-out devices only after the equipment is fully assembled and all affected employees have been notified. Each lock-out device must be removed by the person who put it on.

2.11 CONFINED SPACE SAFETY

Some maintenance procedures on Ground Force Worldwide water trucks require entering the tank itself. Working inside a confined space such as a water tank is highly dangerous. Technicians working inside the tank must follow safety guidelines.

To work safely in a confined space, the entrant must be able to communicate with the attendant who is on duty outside the space. A system of communication must be set up prior to beginning work.

The attendant must always be aware of what is going on inside the space in order to be able to react in event of an emergency.

Oxygen-deficient atmospheres have less than 19.5 percent available oxygen by volume while normal air contains approximately 21 percent oxygen. Deviations from normal concentrations are a major concern in confined spaces.

Ground Force water truck tanks are considered “Permit-Required Confined spaces," based on the following guidelines:

- Contains or has a potential to contain a hazardous atmosphere.
- Contains a material that has the potential for engulfing an entrant.
- Has an internal configuration such that an entrant could be trapped or asphyxiated by inwardly converging walls or by a floor which slopes downward and tapers to a smaller cross-section.
- Contains any other recognized serious safety or health hazard, ex., reduced visibility, darkness, etc.

Equipment will include at a minimum:

- Ventilation Fans (1 minimum for Assembly, 2 minimum for Fabrication) and hoses.
- A calibrated and tested air monitor.
- PPE appropriate to the tasks or jobs being performed.
- Lighting equipment appropriate to the task or jobs being performed.
- Signs posting the confined space and restricting access.

- Stanchions or other barriers restricting the access of non-permit personnel.
- Radio equipment as necessary to support communication between the attendant(s) and entrant(s)
- Rescue equipment tested and in a place near the confined space and readily available for rescue personnel.
- OSHA requires that a standby person be present with suitable rescue equipment when self-contained breathing apparatus or hose masks with blowers are used in atmospheres immediately dangerous to life or health.

The following are other hazards you should consider when evaluating a confined space:

- Temperature extremes can have an adverse effect on entrants. For example, if a space has been steam-cleaned, it must cool before any entry is made.
- Engulfment hazards such as loose material (grain, sand, coal, etc.) can crust over in a bin and break loose under your weight and trap you during entry.
- Noise can become excessive in a confined space and can not only damage hearing but can affect communication, causing warnings to go unheeded.
- Slick/wet surfaces can cause slips and falls and increase the chances of electric shock.
- Falling objects are a danger if work is being done above the entrant in a confined space.

2.12 FIRE EXTINGUISHER USE

⚠ WARNING

If you have the slightest doubt about your ability to fight a fire, EVACUATE IMMEDIATELY

Sound the fire alarm and call the fire department, if appropriate. Identify a safe evacuation path before approaching the fire. Do not allow the fire, heat, or smoke to come between you and your evacuation path. Select the appropriate type of fire extinguisher.

Discharge the extinguisher within its effective range using the PASS method (Pull, Aim, Squeeze, Sweep).

Back away from an extinguished fire in case it flames up again. Evacuate immediately if the extinguisher is empty and the fire is not out. Evacuate immediately if the fire progresses beyond the incipient stage.

Most fire extinguishers operate using the following P.A.S.S. technique:

1. PULL - Pull the pin. This will also break the tamper seal.
2. AIM - Aim low, pointing the extinguisher nozzle (or its horn or hose) at the base of the fire.
3. NOTE: Do not touch the plastic discharge horn on CO2 extinguishers. It gets very cold and may damage skin.
4. SQUEEZE - Squeeze the handle to release the extinguishing agent.
5. SWEEP - Sweep from side to side at the base of the fire until it appears to be out. Watch the area. If the fire re-ignites, repeat steps 2 - 4.

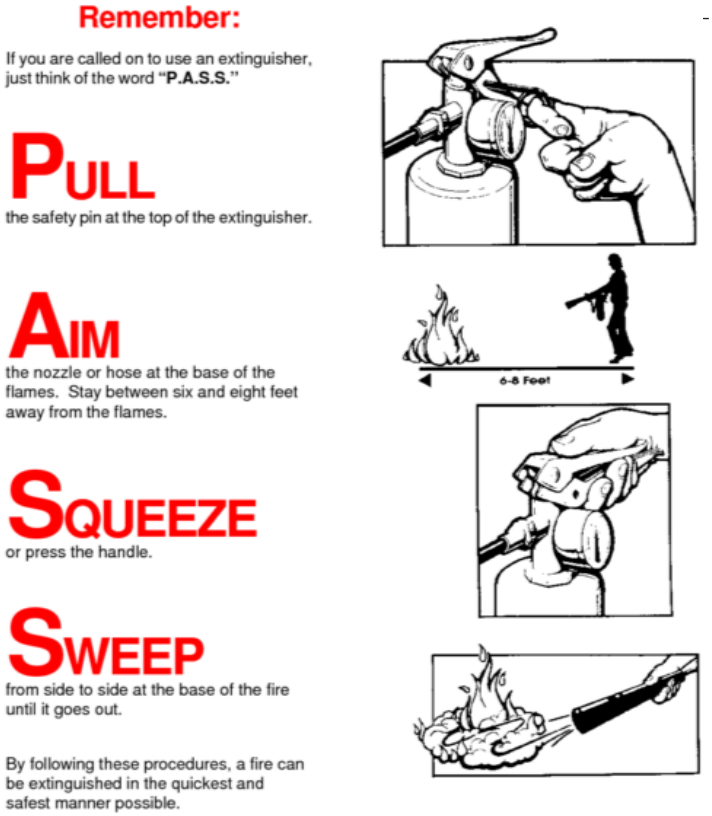

2.13 COMPRESSED AIR HAZARDS

FOLLOW ON-SITE COMPRESSED AIR HAZARDS SAFETY REQUIREMENTS FOR PLACE OF OPERATIONS. THE FOLLOWING ARE ONLY BASIC GUIDELINES:

- Incorrect installation or operation of this unit could result in equipment failure and personal injury. Only qualified persons should install, operate, and service this unit according to the owner's manual, and industry standards, always in compliance with national, state and local codes
- DO NOT exceed the rated output or capacity of the compressor or any equipment in the compressed air system Before working on the compressed air system, follow the in house (on site) LOCKOUT/TAG-OUT procedure of the unit
- Turn off and follow above lockout/tag out procedure; ensure that the pressure is released from the system, and cannot accidently be applied
- The air compressor can start up at any time the switch is "on." Use caution any time the switch is on

2.14 PERSONAL PROTECTIVE EQUIPMENT	
	• Hard hats. All persons shall wear suitable hard hats when in an area where falling objects may create a hazard.
	• Protective footwear. All persons shall wear suitable protective footwear when in or around an area where a hazard exists which could cause an injury to the feet.
	• Eye protection. All persons shall wear safety glasses, goggles, or face shields or other suitable protective devices when in or around an area where a hazard exists which could cause injury to unprotected eyes.
	• Safety belts and lines. Safety belts and lines shall be worn when persons work where there is danger of falling; a second person shall tend the lifeline when bins, tanks, or other dangerous areas are entered.
	• Reflective clothing. Wear reflective clothing which is highly visible (360 degrees) when the arms are up or down or when the body is in any position and even on top of hard hat.
	• Ear protection. Ear protection must be worn when the noise exposure level is above 85 dBA.
	• Respirators. A respirator should be worn if there is danger of harmful dusts, fogs, smokes, mists, gases, vapors, and sprays.
	• Hand protection. Wear appropriate gloves if there is danger of skin absorption of harmful substances, chemical or thermal burns, electrical dangers, bruises, abrasions, cuts, punctures, fractures or amputations.

GROUND FORCE
WORLDWIDE
WORLD'S FINEST MINE SUPPORT EQUIPMENT

OPERATION & MAINTENANCE MANUAL

PRE-COMMISSIONING

✓	PRE-SHIFT INSPECTION
☐	1. Check for and tighten any hydraulic fittings that may loosen. Fittings will frequently loosen and drip the first few weeks of operation.
☐	2. Visually inspect the area around the truck for leakage. Repair any leaks identified during inspection. This inspection should include the interior of all compartments.
☐	3. Visually inspect the body mounts daily for tightness. Loose body mounts are indicated by mud build-up cracking away, or by visible gaps between mounting components. Refer to maintenance section and tighten any loose mounts before operating vehicle.
☐	4. Visually inspect all tanks mounts using step #4 as a guideline.
☐	5. Check for loose hoses and/or wiring harnesses which may become entangled during operations. Secure any loose items before operating the vehicle.
☐	6. Perform any other pre-operation inspections as required by the chassis manufacturer or required by local procedures.
☐	7. On hose reels, if so equipped, apply one pump with a manual grease gun to the reel bearing every 2 months.

WATER TRUCK COMMISSIONING PROCEDURE

The following procedures apply to units that have been mounted on the chassis at the factory. This procedure is written to provide the mechanics in the field with a list of steps and checks to be performed to ensure that the unit is ready to be placed in service. Most of these steps are very general in nature and assume that the technician performing them is already familiar with the basic operations of a water vessel. Truck-specific operating instructions will be found in the Operations section of the Ground Force Worldwide Owner's manual. Any drawings that may be necessary for field installation of components are provided as separate documents (in crate with loose parts). If further guidance or clarification is required, please contact:

Ground Force Worldwide Service Department

E-mail: service@gfworldwide.com

Telephone: 1 (208) 664-9291

3.1 PRE-OPERATION NOTE

Because of strict regulations which govern the overseas shipment of equipment, any fluids or oils which are not necessary for movement of this unit have most likely been removed or drained.

Any and all gate valves or ball valves pertaining to the hydraulic oil tank have been closed to help eliminate any interior contamination to the tank.

3.2 POST-SHIPMENT PREPARATION

This unit has been specially prepared to eliminate the damage that can occur to equipment during ocean transport. There are a few procedures that may need to be addressed prior to operation of this unit.

- Remove all shipping film. This film is typically applied with a paint spray gun. This is meant to provide protection directly on non-painted, machined surfaces. The film may be removed by wiping down the surface with a rag soaked with lacquer thinner or strong grade rubbing alcohol. Because this film is very tacky and is not soluble with water or most oils, all surfaces must be cleaned thoroughly to prevent the malfunction of moving parts.

3.3 PHYSICAL INSPECTION

After delivery of the unit, it should be inspected to ensure that components did not loosen during shipping. Particular attention should be paid to the following:

- Body Mounts - The rubber skirt board will allow for some settling of the body during transport. Refer to the maintenance instructions provided in the Ground Force Worldwide Parts Manual for body mount locations and torque specifications. Be sure that the rubber skirt board between the sub frame and the chassis frame is in the correct location, and re-torque all body mounting fasteners as defined in the maintenance section of this manual.
- Compartments - Inspect all compartments and remove any loose parts. Check that all hose reels, control panels, pumps, etc. are securely fastened to their respective mounting brackets.

3.4 OPTIONAL ACCESSORIES

There are a variety of accessories available on water trucks, with some options only available on specific chassis types.

General options available on all vehicles:

- Anodes
- Manway access hatch
- Fill chute
- Low-level shut off
- Side spray
- Visual water level indicator
- Electric water level indicator
- Foam injection system
- Auxiliary air compressor
- Gravity dump bar
- Pressure bar
- On load/fill pump
- Pressure washer system
- Remote controlled water cannon
- Suction loading system
- Clearance light system
- High performance pump
- Intermittent spray package

Platform-specific options:

- Hydraulic cylinder lift
- Platform with hydraulic step

3.5 LOOSE PARTS

The floodlights are removed from the truck after testing and shipped as loose parts. This is to prevent damage during shipping. The floodlights should be re-installed and re-connected. There may be other loose parts shipped as well (bumpers, handrails, wheel chock holders, etc.) Refer to the overview drawings (or any specific instructions provided) and install these parts in their proper locations.

3.6 LIGHTING SYSTEMS

Note that lighting systems will only work on this body with the ignition key on. Refer to the Ground Force Worldwide Owner's Manual for specific information.

- **Verify that all headlights, marker lights, turn signals, beacons, etc. work properly. Also check that the back-up alarm works.**
- **Check all exterior floodlights for proper operation.**
- **Check that any interior compartment lights are working properly.**

3.7 CUSTOMER-INSTALLED COMPONENTS

Some components required for operation of this truck are supplied by the customer. These include items such as additional lighting or visibility items, quick disconnect (QD) couplings for tank filling, extra fire extinguishers or fire suppression systems, placards and signs relating to specific products to be placed in the product tanks, etc. Determine what components (if any) are required and install them prior to filling any product or foam tanks or placing truck in service.

3.8 PRE-START CHECKS

Refer to the vehicle owner's manual and perform all new unit break-in and pre-startup inspections.

3.9 ENGAGING HYDRAULIC SYSTEM

Once all of the above steps are complete, start the truck and engage the hydraulic system. When the hydraulic system is properly engaged and there is no hydraulic demand, the system standby pressure will be indicated on the system pressure gauge at the operator's station. This indicated pressure will rise and fall based on hydraulic system demand.

3.10 WATER PUMP ROTATION

Reversing the operation of a centrifugal water pump will result in poor water pump performance and will lead to water pump damage. Verify the direction of the water pump's rotation before initial testing.

The water pump will not operate without water in the tank above the low-level shut off set point. If it is necessary to test without water in the tank, jumper the wires on the low-level float on the front head of the tank. Contact Ground Force for more information.

⚠ WARNING

Do not run the pump for more than a couple of seconds. Running a dry pump can cause pump damage.

3.11 ELECTRICAL CONTROL CHECKS

Perform the below checks with the ignition key on but the engine not running. It is often convenient to perform these checks before filling the water tank. It may be necessary to engage the hydraulic system for some of these checks.

- **Check all lighting circuits and the back-up alarm.**
- **The low level shutdown circuit must be tested prior to filling the tank with water. Turn the water pump control switch to on while observing the low level shutdown timer. The timer should shift and break the pump's electrical control circuit after five seconds.**
- **Check that the spray head controls energize the correct solenoid coil. Check that the butterfly valve controls operate the correct valve in the proper direction.**
- **Verify that the water cannon responds correctly to the directional controls.**

3.12 INITIAL START UP

1. Start the truck and allow the engine to warm up according to the manufacturer's instructions.
2. Verify that the hydraulic system engages and that the water pump direction of rotation is correct.
3. Refer to the Operation section in this manual.

Test all delivery functions according to these instructions.

4. Reset the water level if equipped with analog water level gauge (float switches are installed on the tank). Press buttons 1, 3, 4 & 5 at the same time to open the water level reset option.

5. Press the Reset Water Level button, then press X to return to the main screen.

Once all operational tests are complete, the water truck is ready to be placed in service.

3.13 TANK FILLING

Once all of the loose components have been re-installed and the controls have been verified, the water truck is ready to be filled in preparation for an operational test. Refer to the Water Control System section and check for proper operation of all water delivery systems.

- Before filling the water tank, verify that all low point drain valves are shut, and that all low point drain plugs are re-installed.
- After the drains are verified sealed, fill the water tank according to local procedures. Observe any tank level indicator system that may be installed to verify operation during water tank filling.
- Engage the hydraulic system and start the water pump. Verify direction of rotation if not already performed. Reverse operation of a centrifugal water pump will result in poor water pump performance and often lead to water pump damage.
- Cycle each spray head individually and adjust collar for proper spray pattern.
- Engage the spray head timers and verify that the timers are working correctly and respond to operator input.
- Open the water cannon isolation valve and verify acceptable water cannon performance. It is necessary to raise engine speed to achieve optimum performance.

3.14 DIESEL-FIRED HEATING SYSTEM

If a heating system is installed, check its operation as follows:

- Verify that the system surge tank level is a minimum of halfway up the lower sight gauge. Fill this tank as necessary with engine coolant.
- Refer to the manufacturer's start-up instructions and start the heater.
- Monitor the heater's operation, and the level in the surge tank. It may be necessary to re-prime the heater's recirculation pump as air bubbles work out of the system.
- The heater is thermostatically controlled, and the burner will cycle on and off automatically. The system should be allowed to run until the burner cycles three or four times with no drop in surge tank level or re-priming of the recirculation pump.
- Even after this initial testing is complete, it is still possible for air pockets to be trapped in the system. These trapped air pockets will work themselves out of the system within the first few days of truck operations with the heater's recirculation pump running. During this time frame, the level in the surge tank must be carefully monitored to prevent allowing the pump to run dry and cause damage to the pump.

NOTICE

For further information contact Ground Force Technical support to request the manufacturer's manual by writing to service@gfworldwide.com.

OPERATION & MAINTENANCE MANUAL

OPERATION

SECTION 4
WATER DELIVERY SYSTEMS

4.1 OPERATOR'S STATION

All components and systems installed by Ground Force Worldwide are electrically controlled unless otherwise noted. Operator controls are located in the cab of the chassis.

Some components and systems may be controlled from the operator's station at the rear of the body.

Electrical power for all body-mounted systems is supplied from the fuse panel in the relay enclosure. This enclosure is physically located at the front of the water tank.

4.2 NOISE LEVELS

Noise levels present at the operator's station may vary, and depend on the equipment under service, the specific functions active, and the status of external doors. Use caution and evaluate each work site for the specific site-specific levels of airborne noise emissions. Hearing protection is mandatory when operating for extended periods or in noisy environments that exceed 85 dBa. Refer to the chassis manufacturer's information regarding internal cab sound rating.

4.3 WATER CANNON

A water cannon, if installed, is typically mounted at the front of the tank or on the front of the chassis. Water cannon controls are located in the cab.

To operate the water cannon:

1. Ensure the Ground Force water tank is full and the water pump is primed and started.
2. If a program utilizing the water cannon has been saved, navigate to that program using the Water Control System. (See the Water Control System instructions for Edit Program.) The operator can also use the 8-button keypad to engage the water cannon. Each button will be labeled with its function.

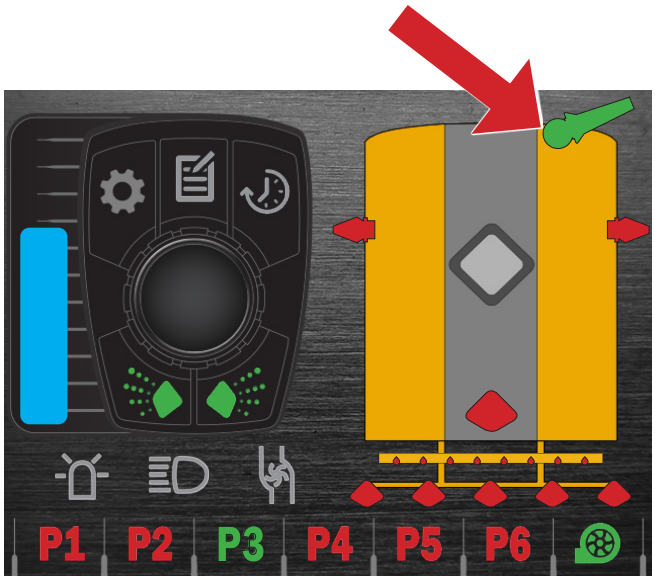

3. Once the water cannon valve is active, use the cannon's controls (typically a joystick or push-button remote) to direct the stream of water.

⚠ CAUTION

The water stream from the water cannon is very powerful.

Be sure that the water cannon is aimed away from equipment susceptible to water damage and all personnel prior to opening the water cannon isolation valve.

4. For most units, raising the engine speed will increase the range of the water cannon. Use engine speed in conjunction with the directional controls to direct the water stream as desired.
5. Shut the water cannon isolation valve once its use is no longer desired, or after the water pump stops automatically as the tank empties.
6. Stop the water pump (if necessary) after the water cannon isolation valve is shut.
7. Some water cannon directional controls are programmable. If so, the programming information is located with the other manufacturer's information.

Refer to the Parts Drawings section of the Parts & Schematics Manual for more information.

4.4 HOSE REEL

Some trucks may be equipped with a spring-rewind hose reel. To operate the hose reel:

1. Ensure the water tank has adequate water for the operation.
2. Using the Water Control System, make sure the water pump is engaged and running.

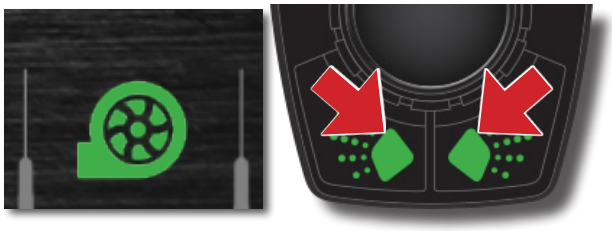

3. If equipped with a high idle switch, engage the high idle prior to dispensing water.

NOTICE

The parking brake must be set before engaging the high idle.

4. Open the ball valve.
5. Remove hose from the reel by simply pulling it off. Maintain positive control of the hose at all times during removal.
6. The hose is locked in place by latching the ratchet into the pawl. Positive control of the hose should be maintained until it is verified that the ratchet is latched.
7. When finished with water delivery, the hose reel is rewound by pulling on the hose, releasing the ratchet latch, and slowly allowing the spring tension to rewind the hose. Maintain positive control of the hose until the ball stop contacts the fairlead roller.

⚠ CAUTION

Prior to releasing tension on the hose, one of the following must be met:

1. **The ratchet is seated against the pawl, locking the hose reel in place.**
2. **The ball stop on the hose is in contact with the fairlead rollers.**

Always "walk" a hose back into a spring rewind hose reel. Positive control of the hose must be maintained at all times

4.5 STABILITY

When operating any machine on grade, the following criteria must be considered: machine configuration and model, maintenance condition, operating speed, conditions of the terrain, fluid levels, and tire inflation pressures. The skill and judgment of the operator are of primary importance.

OPERATING RESTRICTIONS	GRADE
Maximum working grade	20%
Maximum side grade	10%

NOTICE

The stability of the water truck will change as the water level in the tank shifts during operation.

A well-trained operator following the instructions located in this manual will provide for the safest operation. Operator training provides a person with the following abilities: observation of working and environmental conditions, feel for the machine, identification of potential hazards, and operating the machine safely by making appropriate decisions. Consider the following points when working on slopes:

- **Speed of travel – At higher speeds, forces of inertia tend to make the machine less stable.**
- **Roughness of terrain or surface – The machine may be less stable with uneven terrain.**
- **Direction of travel – Avoid operating the machine across a slope. When possible, operate the machine up and down the slopes.**
- **Place the heaviest end of the machine uphill when you are working on an incline.**
- **Nature of surface – Ground that has been newly filled with earth may collapse from the weight of the machine.**
- **Surface material – Rocks and moisture of the surface material may drastically affect the machine's traction and stability. Rocky surfaces may promote side slipping of the machine.**
- **Installed components – The equipment installed onto the base chassis or modifications made to the completed unit for reasons of service, breakdown, or dismantling may impact the overall machine stability. The balance of the machine will change as components are added or subtracted.**

As no modifications to the machine are foreseen at the time of the writing of this manual, evaluate all changes with consideration given to stability. When in doubt, contact Ground Force Worldwide, or its authorized representative, with any questions or concerns.

In general, avoid conditions that can lead to tipping the machine. The machine can tip when working on hills, banks, or side slopes. Ensure that every grade is evaluated for the criteria listed above and other individual circumstances before operating and that grade.

4.6 WATER SYSTEM DRAIN

The water system drain allows the operator to purge water left in spray heads. If equipped with a water drain system, use the Water Control System display to activate the drain valve (See the Water Control System section of this manual for instructions). The water pump must be off before activating the drain valve.

NOTICE

The drain valve must be closed before engaging the water pump.

When the truck is started again, all valves, including the drain valves, will automatically close.

4.7 DIESEL-FIRED HEATER

The diesel-fired heating system will circulate warm coolant through jackets surrounding the water valves. A dedicated diesel burner is installed as a heat source.

These systems are not normally tied into the engine's cooling systems. The diesel burner receives its fuel from a stand-alone tank installed on the rear of the water tank. The fuel tank must be filled at the beginning of each shift during use.

The heater will automatically shut off if it runs out of fuel, or if fluid is not being circulated.

NOTICE

Operating the heater without the engine running can drain the chassis battery. Use a charging device if running the heater for extended periods of time without the engine running.

Machines equipped with an independent heater system will have an expansion/burp tank that has been installed as the high point in the circulation system. The level in this tank must be checked at the beginning of each shift during use. Any visible level is acceptable when the system is at operating temperature. The minimum tank level for a cold system is halfway up the lower sight glass.

A control switch for the heating system is installed in the chassis cab. The heating system receives power directly from the chassis battery, so the switch must be manually turned off when not in use.

NOTICE

Do not use bio-diesel in the diesel-fired heater.

Do not operate if the fluid level is too low.

Do not operate if the diesel fuel level is too low.

Use only Caterpillar Long Life coolant in the heating system.

4.8 FREEZE PROTECTION

If the water truck is to be parked and there is a danger of freezing, perform the following:

1. Pump as much water out as possible before proceeding to the parking area.
2. Park the vehicle in an area with adequate drainage and open the gravity dump valve(s), if the water truck is equipped with dump valves.
3. Open the water cannon isolation valve (with WCS push button on display).
   a. Aim the water cannon nozzle down. This will drain any water that would otherwise be trapped in the water cannon.
4. Low point drain valves have been installed to drain any residual water from the piping and components. Look in the following areas and open all drain valves/petcocks:
   a. There is a drain installed on each spray head standpipe to drain the portion of pipe above the spray head isolation valve.
   b. Due to individual tank configurations, some gravity dump valves are higher in elevation than the lowest point in the water tank. If the gravity dump valves will not fully drain the water tank, a drain port is installed at the lowest point in the water tank.
   c. A drain is installed in the lowest port in the water pump housing. This is generally the lowest point in the water distribution system.

4.8 FREEZE PROTECTION (CONTINUED)

d. Drains will also be installed anywhere that there is a possibility of water not draining through the above locations.

5. Utilize the air blow-out system to clear the hose reel of water. Close the ball valve at the hose reel, then connect compressed air to the fitting located at the hose reel. Use compressed air to eliminate all water trapped in the hose.

If the spray head controls use water pressure for pilot pressure, the diaphragm cavities must be drained through the plugs/petcocks that are installed in the valve bonnets. At the same time, the pilot lines should be disconnected and drained to protect the pilot valves. All valves should be left open, and all lines disconnected, as long as the truck will remain idle and there is a danger of freezing. Reconnect all lines removed, and shut all valves opened, before placing the water truck back in service.

⚠ WARNING

NOT PERFORMING THESE PROCEDURES FOR COLD WEATHER WILL VOID ALL WARRANTIES

4.9 TROUBLESHOOTING

If the Ground Force equipment suffers any type of problem that impacts performance, immediately cease water delivery operations, turn off the water pump, and stop the truck. Secure the chassis and follow all site procedures to safely service the equipment.

When problems arise, Ground Force is ready to help. Call any time to speak to one of our Product Support Representatives at +1 (208) 664-9291. Before calling, it is helpful to have some basic information available to assist in determining the nature of the problem:

1. What is the serial number of your machine? (For assistance locating the serial number, visit our Parts & Product Support page HERE for more information)
2. Describe the problem. What are the symptoms? Is there a pattern to their occurrence?
3. Provide as much information as possible.
   - Hydraulic problems: What is the main pressure at the system pressure gauge? What is the hydraulic oil temperature and ambient temperature? Are there signs of overheating? Are the functions “weak” or “slow”?
   - Electrical problems: What is the main system voltage? Are there error indications at the control panel?
   - Mechanical problems: Provide pictures and descriptions of the affected components.

4.10 WATER TANK RAISE & LOWER PROCEDURE

Raising and lowering a Ground Force Worldwide water tank is very similar to operating a Caterpillar dump bed, but there are some special considerations. Please read the following instructions carefully.

NOTICE

Drain the water tank.

The water pump controls must be turned off in the Ground Force Water Control System.

Remove the quick fill plumbing.

Enable the hoist control in the ECM.

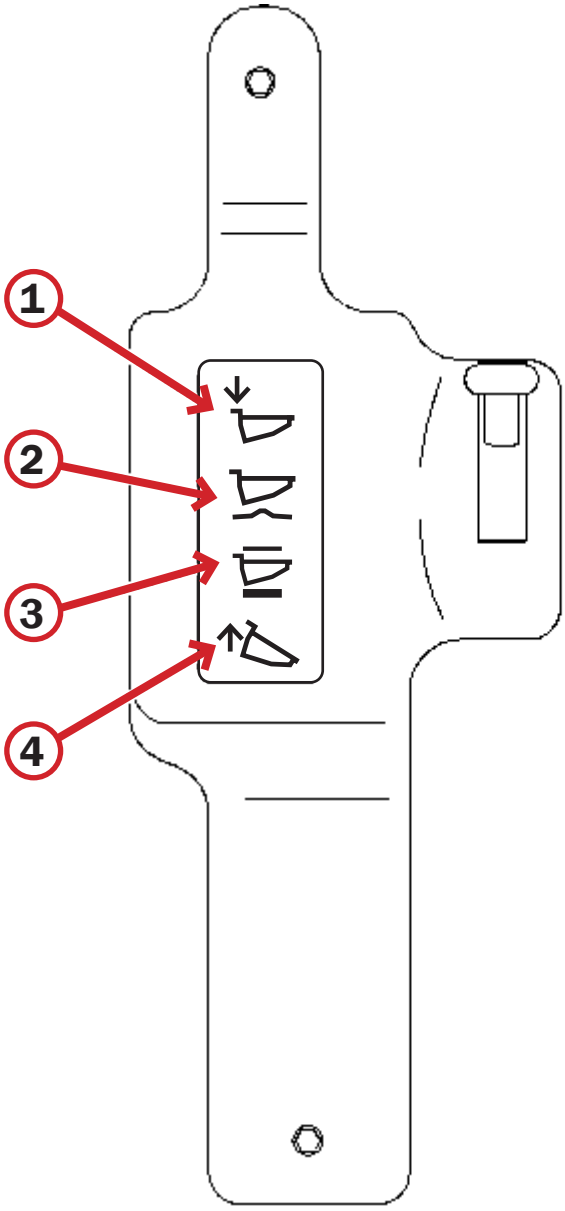

⚠ CAUTION

The Ground Force Worldwide water tank design has different tail clearances from a Caterpillar dump bed.

While tipping, closely observe the tank during operation of the raise function to prevent damage to the tank or surroundings. Remove anything that might interfere with raising the tank.

LOWER (1)

Hold the hoist control lever completely forward in order to lower the water tank. When the hoist control lever is released, the hoist control lever will return to the FLOAT position (2).

FLOAT (2)

When the hoist control lever is in FLOAT position (2), the water tank will seek a level. The hoist control will stay in this position until the hoist control lever is manually moved.

HOLD (3)

When the hoist control is in HOLD position (3), the water tank will not move. The hoist control will stay in this position until the hoist control lever is manually moved.

RAISE (4)

Hold the hoist control lever completely backward in order to raise the water tank. When the hoist control lever is released, the hoist control lever will return to HOLD position (3).

4.11 SAFETY CABLE

⚠ WARNING

When it is necessary to work under the machine with the body (bed) raised, attach the body (bed) retaining cable to the rear tow point. Install the rear tow point pin through the end of the retaining cable.

Failure to properly secure the body (bed) may result in personal injury or death.

A raised body (bed) may fall unexpectedly if a damaged cable is used. Use of a damaged cable could result in personal injury or death.

Inspect the cable for damage and do not use a cable that is damaged.

Wear gloves when handling the cable.

INSTALLATION PROCEDURE

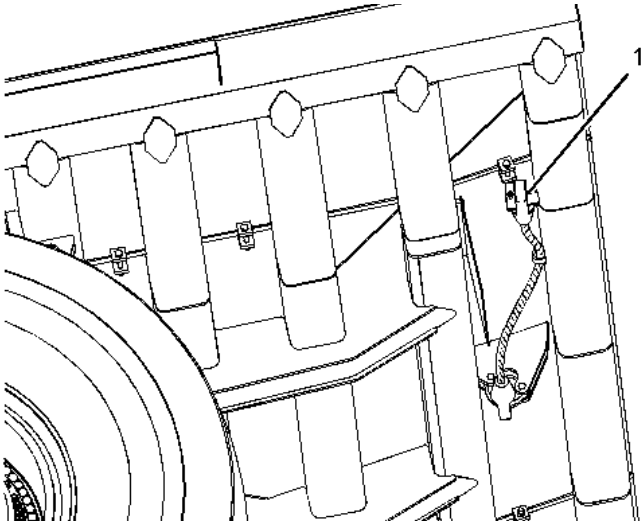

1. Remove all material and any residue from the body before the body is secured in the raised position.
2. Park the machine on a level surface.
3. Raise the body until the desired clearance is reached.
4. Remove cable end (1) from the stored location.
5. Position cable end (1) in rear tow point (3).
6. Install pin (2) through the tow point and the cable end.
7. Move the hoist control to the FLOAT position and lower the truck body until the cable is tight.

⚠ WARNING

Lowering the body to tension the retaining cables using the “Lower” position on the hoist control lever will damage the cables.

If the body is lowered against the retaining cables by using the “Lower” position, replace the retaining cables immediately. Always lower the body against the retaining cables by using the “Float” position on the hoist control lever.

Use of a damaged cable could result in personal injury or death.

REMOVAL PROCEDURE

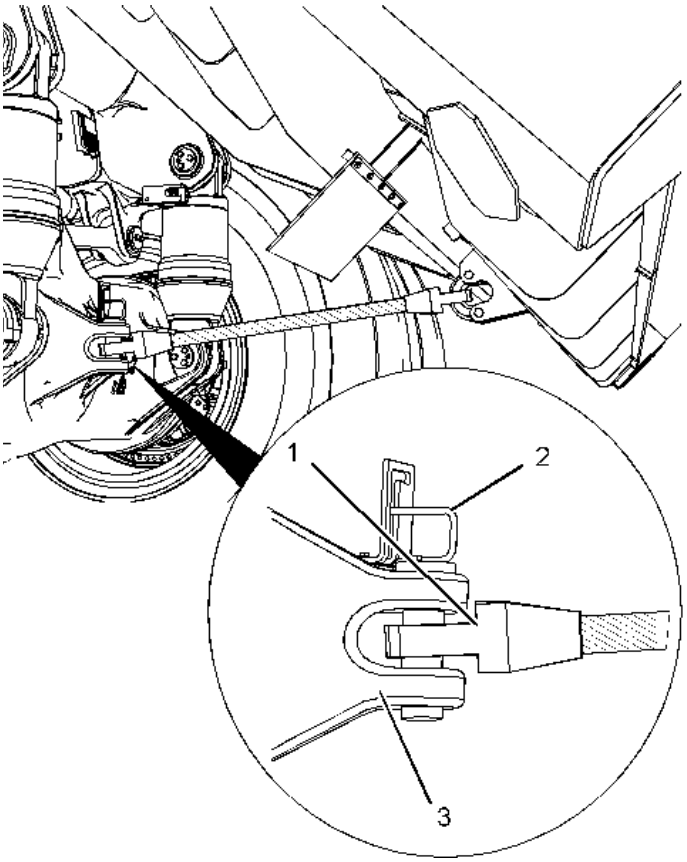

1. Raise the body to the fully raised position in order to loosen the cable.
2. Release the cable end from the tow point.
3. Return the cable end to the stored location.
4. Lower the body.

4.12 SAFETY LOCK PIN

⚠ WARNING

A raised body (bed) may fall unexpectedly and without warning, resulting in injury or death.

When it is necessary to work under the machine with the body raised, install the body retaining pins through the pin bores in the frame and the retaining brackets on the body.

INSTALLATION

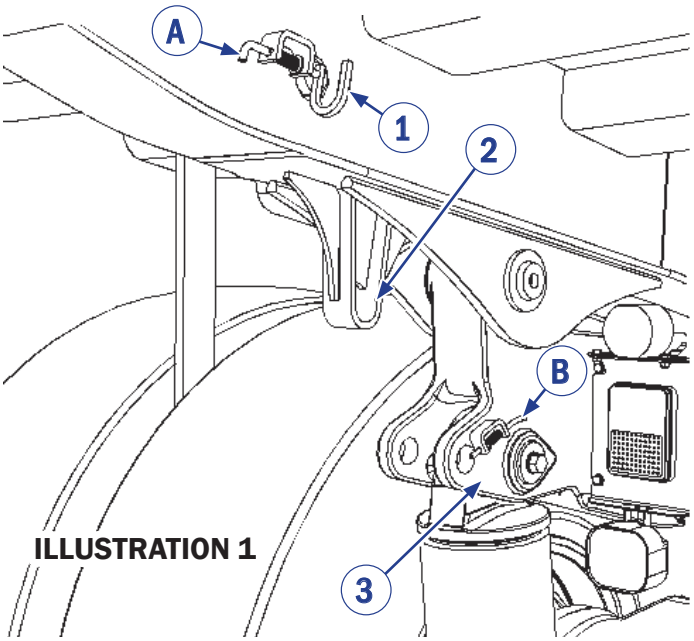

ILLUSTRATION 1

A: Spring rod
B: Spring rod
1: Body retaining pin
2: Body retaining bracket
3: Frame support

1. Raise the tank to the fully raised position. Stop the engine and ensure the transmission is in the P (Parking Brake Applied) position.

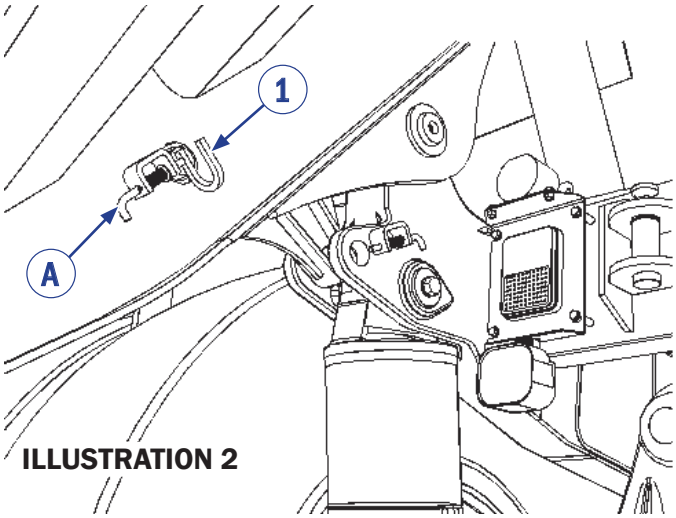

ILLUSTRATION 2

2. Pull spring rod (A) and remove body retaining pin (1) from the stored position on the left side.

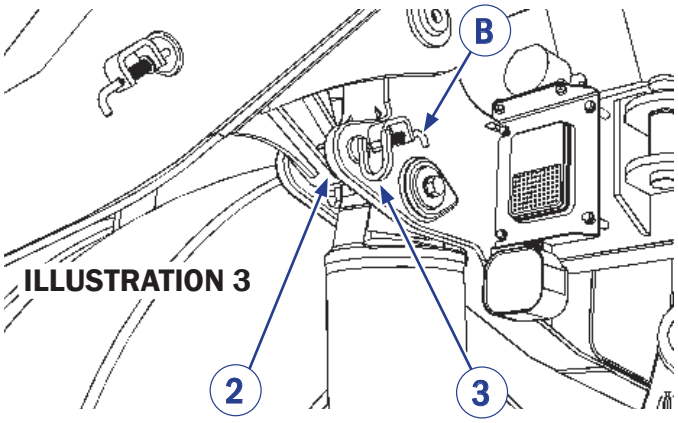

ILLUSTRATION 3

3. Pull spring rod (B) and install body retaining pin (1) through the pin bore in frame support (3) and body retaining bracket (2).

NOTICE

In order to secure the body retaining pin, make sure that the body retaining pin is fully seated before releasing spring rod (B).

4. Perform steps 2 and 3 on the right side.

REMOVAL

1. Raise the tank to the fully raised position in order to relieve any pressure from the body retaining pins. Stop the engine and ensure the transmission control is in the P position.
2. Pull the spring rod (B) and remove the body retaining pins from the frame support on the left side.
3. Pull spring rod (A) and install the body retaining pin in the stored position.

NOTICE

In order to secure the body retaining pin, make sure that the body retaining pin is fully seated before releasing spring rod (A).

4. Perform steps 2 and 3 on the right side.
5. Lower the tank.

GROUND FORCE
WORLDWIDE
WORLD'S FINEST MINE SUPPORT EQUIPMENT

OPERATION & MAINTENANCE MANUAL

WATER CONTROL SYSTEM

WATER CONTROL SYSTEM

The Ground Force Water Control System (WCS) display/control module, encoder and keypad allow the operator to continually adjust the water delivery based on the current conditions without having to stop the truck or return to the shop to change operating parameters. All of the functions and adjustments described are available to the operator when the ignition key is on.

DISPLAY SCREEN

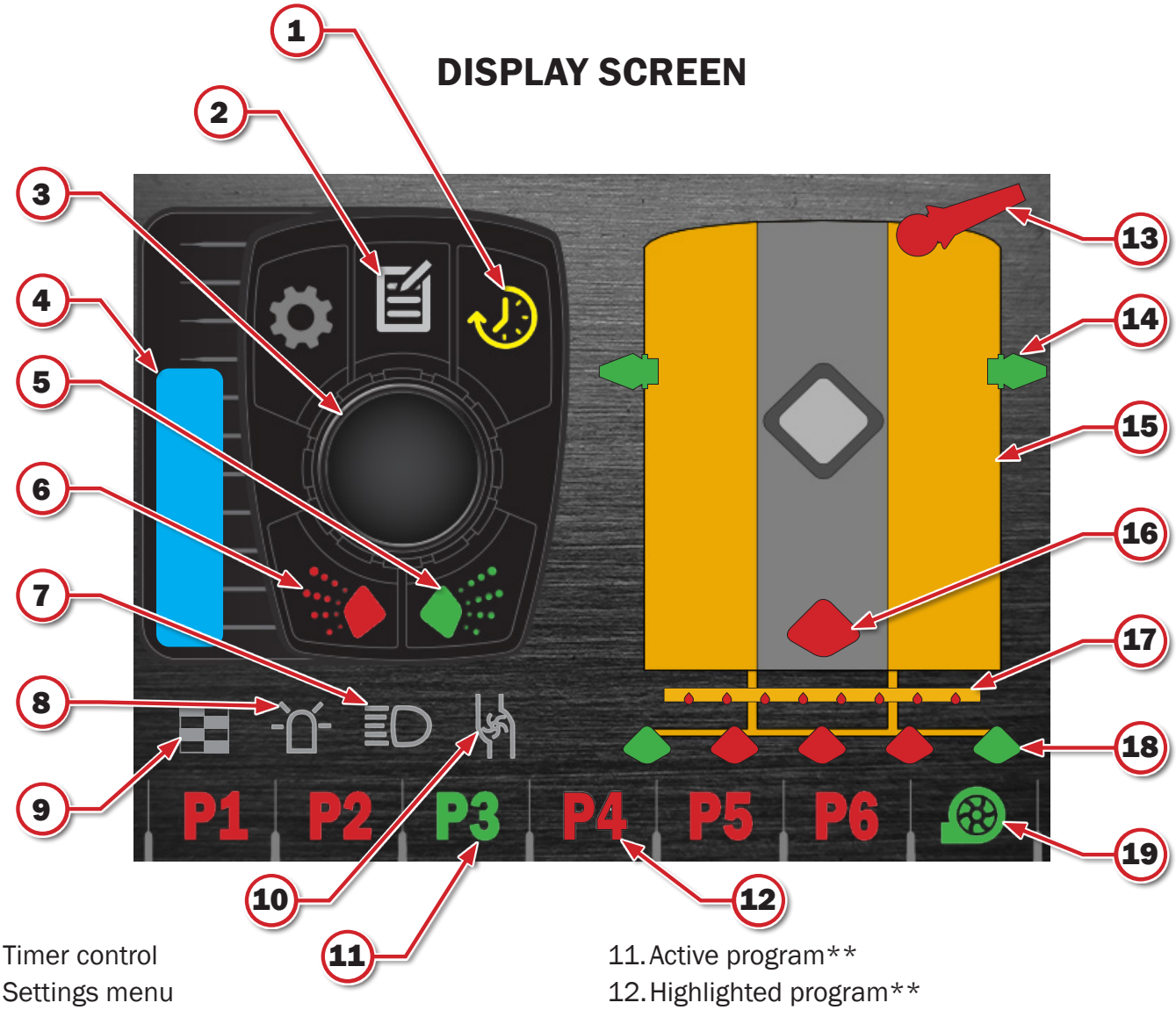

1. Timer control
2. Settings menu
3. System options
4. Water level bar graph*
5. Curb side spray on/off
6. Driver side spray on/off
7. Work lights*
8. Safety beacon*
9. Timer/staggered mode indicator
10. Onload pump*
11. Active program**
12. Highlighted program**
13. Water cannon*
14. Side spray*
15. Water tank***
16. Gravity drain valve*
17. Drip bar*
18. Rear spray bar spray head*
19. Water pump indicator

* Not all devices are present on all trucks. Display will indicate each water truck as it is equipped.

** When selecting a program, the active program will display green, and the selected program will be indicated by a white highlight.

*** Low level warning will appear over the water tank when there is 10 seconds of water remaining. The timer will count down until the low-level shut-off point, when the water pump will automatically shut off to prevent component damage.

OPERATING PROCEDURES

The following procedures explain in detail how to operate the water delivery system. These operating procedures are followed by specific instructions to be used for changing the operating parameters and configurations. The parameters and configurations may be changed by the operator at any time to allow immediate response to changing weather and road conditions.

4.1 WATER TANK FILLING/PUMP PRIMING

The Ground Force water tank features a low center of gravity for your safety. Due to this design, the water pump may require priming after the tank has been fully emptied.

If it is difficult to establish initial water pump flow, follow the process below to prime the water pump.

Water pump priming procedure:

1. Park the truck facing up hill.
2. Start the water pump and open the water cannon isolation valve.
3. Increase the engine speed to increase the water pump speed.
4. Observe the water flow from the water cannon. Once a clear stream (no air bubbles) is established, shut the water cannon valve.
5. If the water pump will not reliably prime, please contact Ground Force for additional troubleshooting and tips.

4.2 WATER DELIVERY OPERATION

The Ground Force Water Control System display/control module will power on with the chassis ignition key. When the chassis is running and ready to operate, the tank is full of water, and all safety precautions have been followed, the Ground Force Water Body can begin delivering water.

5.3 ENCODER

The encoder is the main WCS controller mounted in the chassis cab. It has 5 flat buttons and a center button that rotates, and is used to navigate the functions and programs on the WCS display.

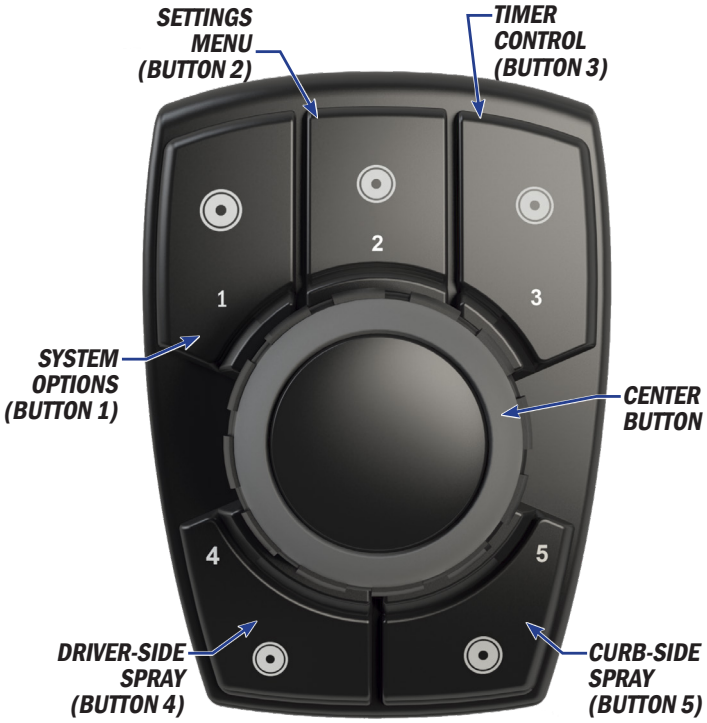

5.4 KEYPAD

If equipped, the 8-button keypad will be labeled by function, according to the truck's specific spray valve configuration. To enable a spray valve, press its associated button. Press the button again to turn off the spray valve and return to the previous water delivery program.

NOTICE

The keypad will override the program selected on the WCS display. Lights on the keypad buttons will indicate which valves are active.

5.5 LIGHTS

Optional work lights and safety beacons may be installed on the Ground Force water tank. They can be activated in one of three ways:

1. Switch: A separate switch may be installed in the cab of the chassis.
2. WCS display: If a Work Light or Safety Beacon icon is visible on the main WCS display screen, press the on-screen button indicating the desired light. The light can also be enabled by pressing the Settings Menu button. Rotate the center button until the desired light icon is highlighted with a yellow square. Press the center button to select the light, then press the Settings Menu button again to return to the main display screen.
3. Keypad: press the button labeled WORK LIGHTS or SAFETY BEACON.

If no switch is present in the chassis cab, refer to the keypad or WCS Display. If desired, a switch can be added to the chassis cab, or lights can be installed to automatically illuminate when the key is on. Contact Ground Force for more information.

5.6 START WATER PUMP

The operator will begin by starting the water pump. Press and hold the two lower buttons of the encoder, Button 4 and Button 5, simultaneously. Hold for at least two seconds until the water pump icon in the lower right corner of the display screen turns green.

NOTICE

In order to avoid damage to hydraulic components, the chassis engine must be at an idle when the operator starts the water pump.

⚠ CAUTION

DO NOT USE WATER PUMP CONTROL TO STOP WATER DELIVERY WHILE SPRAYING.

See operating instructions for more information on temporarily stopping water delivery.

5.7 SELECT PROGRAM

Next, select a program by rotating the center button of the encoder.

The currently active program will appear green. As the operator turns the center button, a white highlight will indicate each selected program.

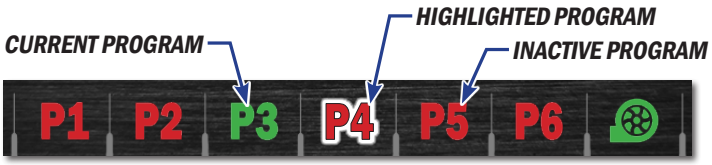

Rotate the center button until the desired program is highlighted, then press the center button once to engage that program. On the water tank display, a white highlight will appear around each valve that is part of the highlighted program.

Press the center button again to begin water delivery.

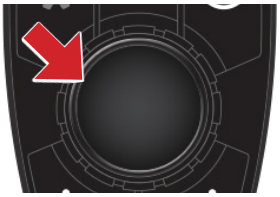

VALVE INDICATOR KEY

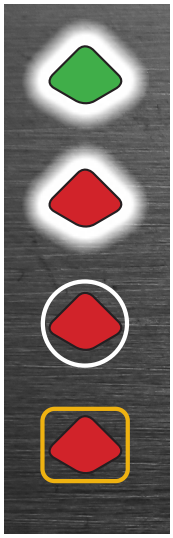

VALVE IS SPRAYING

VALVE IS SELECTED

VALVE IS AVAILABLE TO SELECT - TOUCH SCREEN OR ROTATE ENCODER TO CHOOSE

VALVE IS HIGHLIGHTED - READY TO SELECT

PROGRAM INDICATORS

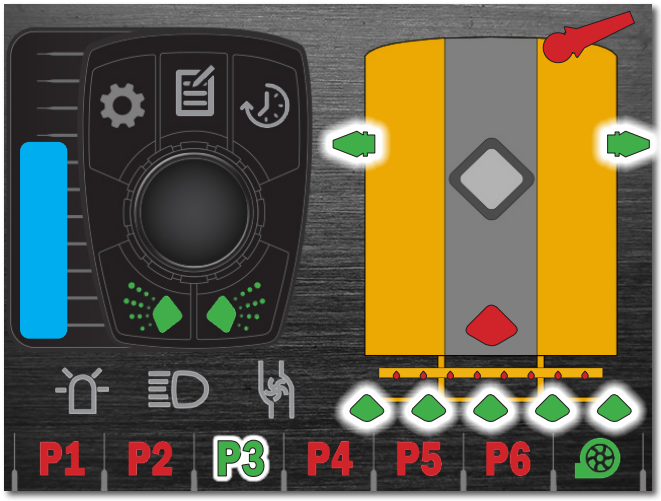

In this image, Program 3 is **both** *highlighted* and *active*.

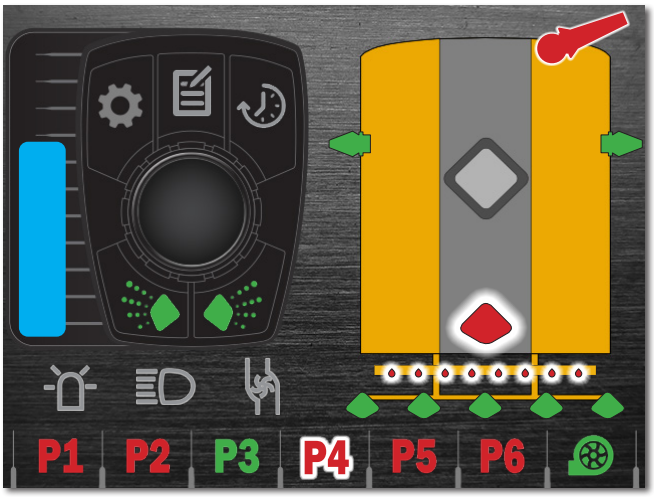

In this image, Program 3 is *active*, but Program 4 is *highlighted*. Push the center button to select Program 4, or rotate the button to continue to the next program.

5.8 ADD VALVES TEMPORARILY

To temporarily add valves to an existing program, touch the valves on the WCS touch screen to add them to the current program. The selected valves will not remain active if the operator chooses another program. Valves included in the program can also be disabled using the touch screen.

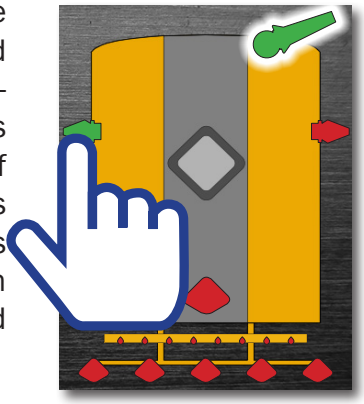

5.9 STOP SPRAY MANUALLY

To temporarily stop water delivery, select one or both of the lower buttons on the encoder (Buttons 4 and 5). This allows the operator to temporarily stop water delivery to one or both sides of the water truck. The button will turn yellow until it is pressed again.

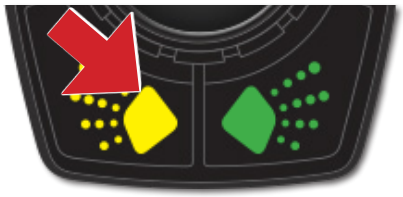

To stop both sides at the same time, press the center button once.

To resume watering operations, press the desired button again.

5.10 STOP WATER DELIVERY

The water pump is designed to operate continuously during water delivery. The water pump will stop automatically once the low level shut-off set point has been reached.

NOTICE

Ground Force recommends using the program controls to stop water delivery. In order to reduce wear and avoid damage to the water pump, hydraulics, and other system components, do not cycle the water pump on and off.

At the end of operations, turn the pump off manually by pressing and holding the two lower buttons of the encoder, Button 4 and Button 5, simultaneously. Hold for at least two seconds until the water pump icon in the lower right corner of the display screen turns red.

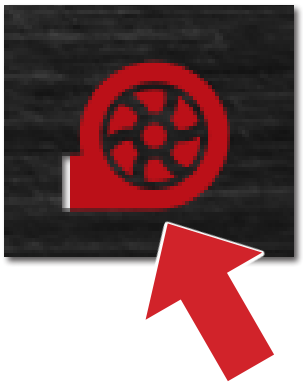

5.11 EDIT PROGRAM

The Ground Force WCS comes pre-programmed with several example programs. The operator can edit these programs to better reflect on-site water delivery requirements.

To create or edit a water control program, first highlight and then select the desired program number (P1 - P6) by rotating the center button. The program indicator should appear green, and a white highlight should be visible at the same time.

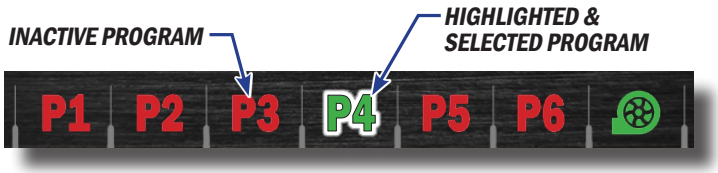

Next, press Button 2. The button indicator on the display screen will turn yellow.

After pressing Button 2, the operator can choose each water spray valve to add to a program, depending on the water truck's specific configuration. Rotate the center button to highlight available valves, moving from left to right and top to bottom. A yellow square will indicate the current valve.

Valves can also be selected using the touch screen. All available valves will be marked with a white circle.

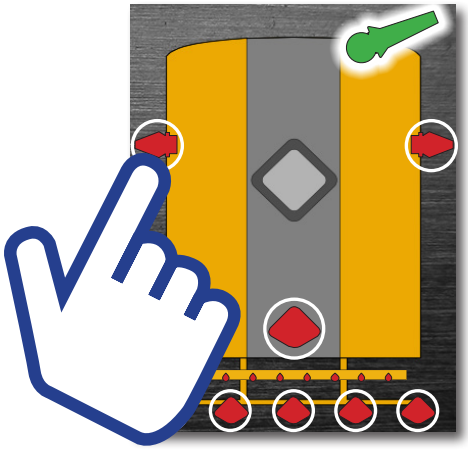

EXAMPLE PROGRAMS

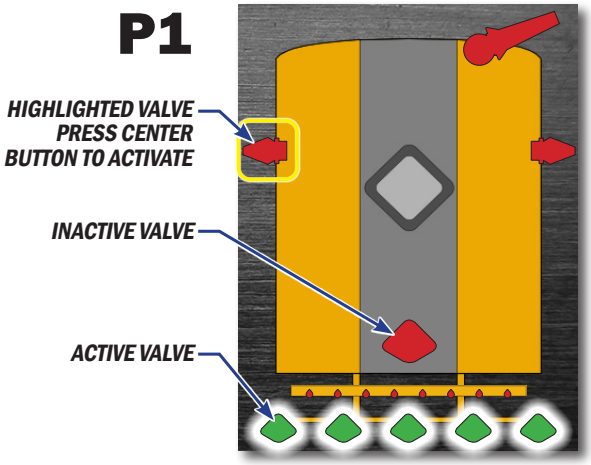

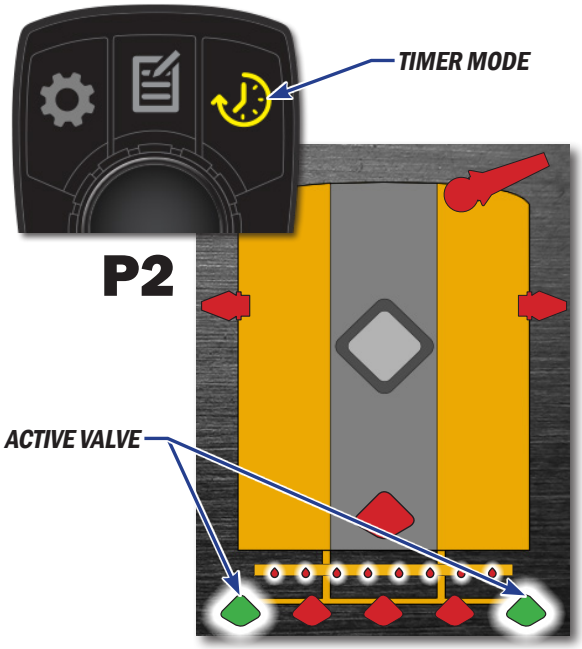

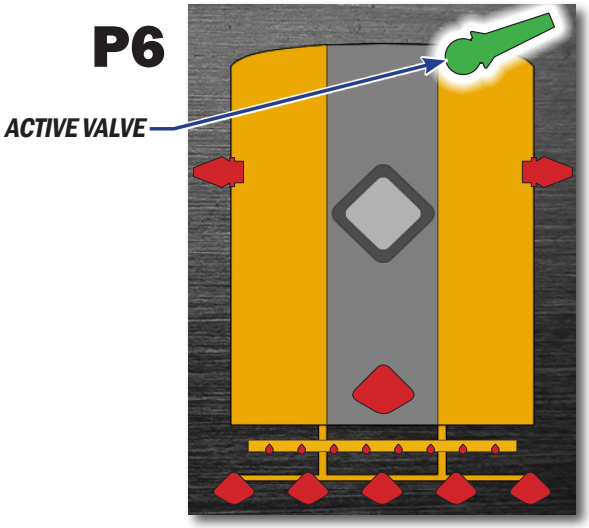

Rotate the center button to highlight each valve, and, while they are highlighted, press the center button to activate the valves desired for that program. A white highlight will appear around each selected valve. When finished, press Settings Menu (Button 2) to save changes and return to operating mode.

To access more program options, press the center button (A clipboard icon will be shown) with no valves highlighted, or use the touch screen to select the clipboard icon..

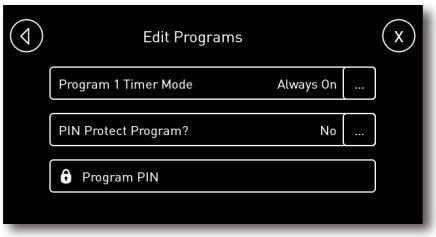

Additional options include:

- **Timed mode**
- **Staggered mode**
- **PIN protection for individual programs**

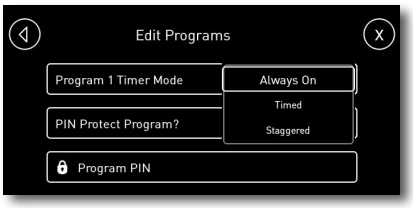

PIN codes allow on-site personnel to choose and set a PIN code lock on some or all programmed spray patterns.

Timed and Staggered modes allow the operator to select either a Timed (ON - OFF - ON) or Staggered (RIGHT - LEFT - RIGHT) spray pattern.

Timed mode

Staggered mode

Press Settings Menu (Button 2) again to exit Programming Mode. Repeat as necessary to create up to 6 programs for various spray patterns.

NOTICE

The (X) shown in the upper right corner of the menu screens is not active. To return to a previous screen, press System Options (Button 1).

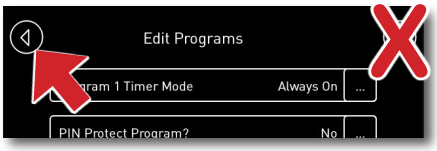

5.12 ADJUSTING TIMER

To adjust the time delay for timed or staggered modes, press Timer Control (Button 3).

The button will turn yellow on the display, and a dial will appear. If staggered mode is selected, the dial will appear yellow. Turn the center button clockwise or counter clockwise to select the on and off interval for staggered mode. When finished, press Timer Control again to exit the timer settings menu.

STAGGERED MODE - ON / OFF TIME

If timed mode is selected, the on and off times can be adjusted separately. The dial will appear green for the "on" interval and red for the "off" interval. Press the center button to toggle between "on" and "off" timer settings.

TIMED MODE - ON TIME

TIMED MODE - OFF TIME

When the desired timer or staggered spray setting is selected, press Timer Control (Button 3) again to return to the main operation screen.

The on/off time is adjustable from a minimum of 5 seconds to a maximum of 40 seconds. To adjust these limits, see the User Adjust menu.

5.13 LOW-LEVEL WARNING

The low water level warning will appear when there is less than 10 seconds of water remaining in the tank at the current delivery rate.

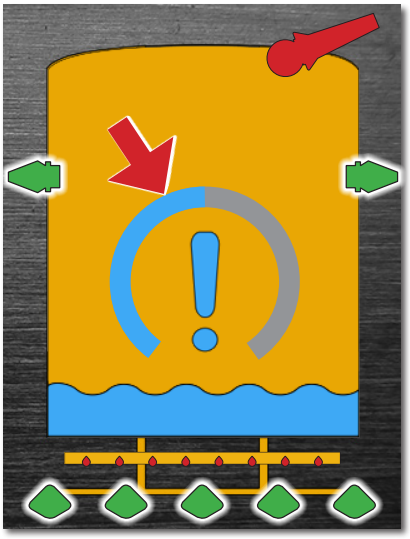

A timer will appear to alert the operator of the time remaining until the tank is empty and the water pump shuts off. When the water level reaches the low-level shut-off set point, the water pump will automatically shut down to prevent damage to the pump. When the water pump has shut down, the water pump icon on the main screen display will appear red.

When the water level is above the low level shut-off set point, the water pump function will be enabled again.

5.14 LOW-LEVEL BYPASS

The low-level shutoff bypass function will turn the pump back on again for 15 seconds. To engage the bypass, press Button 2 (Settings Menu button).

The water pump icon will be red if the low-level shut-off is active. Rotate the center button until the water pump icon in the lower right corner of the display is highlighted by a white circle. Press the center button or tap the water pump icon on the touch screen to restart the pump temporarily (15 seconds).

Press the Settings Menu button again to return to the main display.

5.15 WATER LEVEL INDICATOR[1]

If the Ground Force Water Tank is equipped with float switches or a water level sensor, a bar graph will appear to the left of the keypad on the display screen, showing the current water level in the tank.

5.16 MAIN MENU SETTINGS

Press System Options (Button 1) to access the main settings menu.

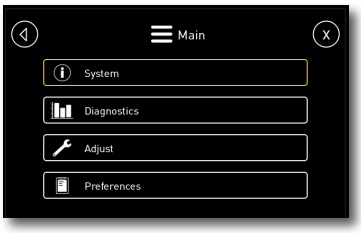

SYSTEM, DIAGNOSTICS MENUS

The System and Diagnostics menus provide technical information for troubleshooting and diagnostics. Those menus do not provide any tools for on-site working adjustments.

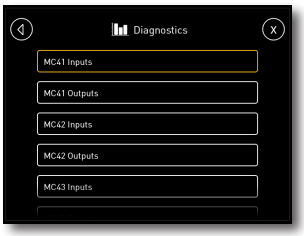

For system settings and troubleshooting assistance, please contact the Ground Force Parts and Product Support department:

+1 (208) 664-9291

Parts & Product Support E-mail:
PPSR@GFWORLDWIDE.COM

Service Department E-mail:
Service@gfworldwide.com

ADJUST MENU

The Adjust menu provides options for the user to set timer mode options. Ground Force factory settings for the Timer On and Timer Off upper limits is 40 seconds, and the lower limits are 5 seconds.

NOTICE

Lower limit settings below 3 seconds will not allow the valves to open and close.

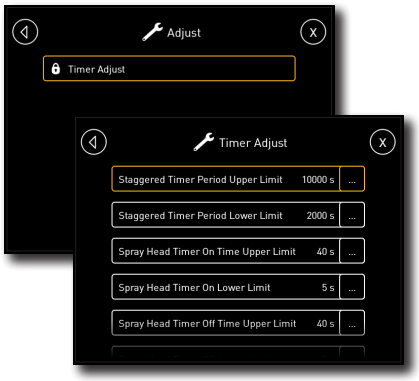

PREFERENCES MENU

The Preferences menu allows the operator to adjust the display brightness and screen saver, set the date and time, and select the language for the WCS display.

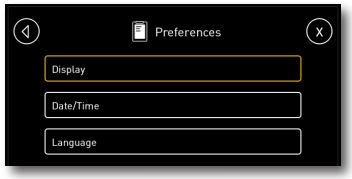

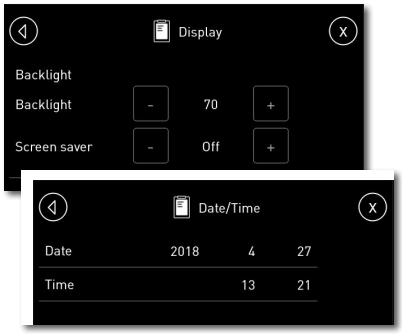

NOTICE

Once the chassis key power is turned off, date and time settings are not supported.

1 Not all Ground Force water tanks are equipped with this feature.

5.17 GROUND SPEED CONTROL

This water truck may have a variable speed option for the water pump, or Ground Speed Control. This allows the operator to set water distribution to match the ground speed of the chassis, avoiding over-watering at low speeds or incomplete coverage at higher speeds.

To adjust variable speed settings, the chassis engine must be running and the parking brake set.

Press buttons 1, 3, 4 & 5 at the same time to open the calibration settings page. Release the parking brake and drive forward at the slowest speed you will be using while watering.

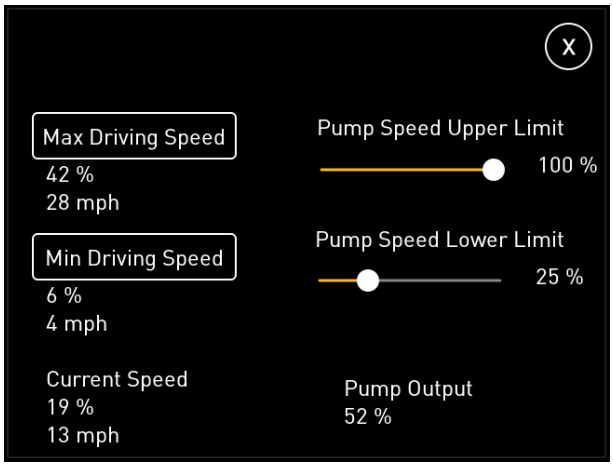

Press the Min Driving Speed button.

Accelerate to the fastest speed you will be using while watering.

Press the Max Driving Speed button.

Using the sliding bar, adjust the upper and lower water output levels. If the ground travel speed is below the minimum set driving speed, the water pump output will be the lowest level set.

If the ground travel speed is above the maximum level set, the water pump output will be the upper limit set.

Once the speeds and water pump output levels are set, press X to return to the main screen and begin watering operations. The settings will remain saved in the Water Control System the next time the water truck is operated.

GROUND FORCE WORLDWIDE
WORLD'S FINEST MINE SUPPORT EQUIPMENT

OPERATION & MAINTENANCE MANUAL

MAINTENANCE SCHEDULES

6.1 OVERVIEW

Maintaining your equipment will help prevent breakdowns and greatly extend the service life of your Ground Force equipment. It is a fairly simple process to maintain fluid levels, change fluids and filters when scheduled, and monitor and tighten bolts or fittings that have worked loose.

6.2 MAINTENANCE SCHEDULES

Maintenance schedules are provided, including sample maintenance logs. This will help with scheduling and tracking of maintenance.

6.3 VENDOR-SUPPLIED COMPONENTS

See the manufacturer's manual for maintenance, safety and operation information for all non-Ground Force components. To request manufacturer's manuals, contact Ground Force Technical support to request by writing to service@gfworldwide.com.

6.4 OIL COOLER

If leaks develop in the oil to water cooler, it is possible for the hydraulic oil to mix with the water. Observe the main hydraulic tank for signs of water ingress or loss of hydraulic fluid.

Inspect the seal by draining water in a bucket and looking for oil in the water when putting into service after winter storage.

The oil-to-water cooler must be winterized or the water will freeze and damage the cooler. Drain the water out of the cooler when freezing conditions are possible by opening the drain valve and purging all water from the cooler. Compressed air may be used to force water out of the cooler and into the pump volute.

After blowing the water out, close the drain valve but leave the supply and shutoff valves open to avoid trapping residual moisture.

MAINTENANCE LOG

	DATE ▶																																				
DAILY MAINTENANCE SCHEDULE																																					
DAILY	VISUALLY INSPECT																																				
	• HYDRAULIC FLUID LEVEL																																				
	• BODY MOUNTS																																				
	• REAR BODY PINS																																				
	• TANK MOUNTS																																				
	• PUMP MOUNTING BOLTS																																				
	• CHECK HOSES AND FITTINGS FOR LEAKS																																				
	• HOSES AND WIRING HARNESSES ARE SECURED																																				
	• FLUID LEVELS FOR AUX HEATER FUEL AND EXPANSION TANK																																				
	VERIFY HYDRAULIC CONTROL VALVES OPERATE PROPERLY																																				
	VERIFY SAFETY EQUIPMENT IS PRESENT AND FUNCTIONAL INCLUDING EMERGENCY STOP SWITCHES, WHEEL CHOCKS AND FIRE EXTINGUISHERS																																				
	VERIFY PROPER OPERATION OF ALL VALVES																																				
	VERIFY PROPER OPERATION OF THE AUXILIARY HEATING SYSTEM																																				

**NOTE: FREQUENCY MAY VARY DEPENDING ON NEED. IT IS THE USER'S RESPONSIBILITY TO ESTABLISH APPROPRIATE SERVICE INTERVALS.*

MAINTENANCE LOG

		DATE ▶																																	
MONTHLY MAINTENANCE SCHEDULE																																			
	CHANGE HYDRAULIC FILTER(S)*																																		
MONTHLY	INSPECT FOR DAMAGE, LOOSE SET SCREWS, & LEAKS:																																		
	• HOSES																																		
	• FITTINGS																																		
	• PUMPS AND MOTORS, INCLUDING COUPLERS																																		
	ADJUST AS NEEDED:																																		
	• WATER PUMP STUFFING BOX (DROPLET RATE OF 40-60 DPM)																																		
	OPERATE THE AUXILIARY HEATER FOR 10 MINUTES																																		
2-MONTH MAINTENANCE SCHEDULE																																			
2 MONTHS	LUBRICATE:																																		
	• WATER PUMP																																		
	• HOSE REEL FAIRLEAD ROLLERS																																		
	• HOSE REELS AND SWING JOINTS																																		
4-MONTH MAINTENANCE SCHEDULE																																			
4 MO.	INSPECT HYDRAULIC OIL																																		
6-MONTH MAINTENANCE SCHEDULE																																			
6 MO.	INSPECT OIL COOLER																																		
	INSPECT ANODES; REPLACE IF NECESSARY																																		
YEARLY MAINTENANCE SCHEDULE																																			
YEARLY	INSPECT FOR DAMAGE, LOOSE CLAMPS OR CRACKS:																																		
	• PPE TIE OFF CABLE ON TOP OF TANK																																		
	• PPE TIE OFF POINTS ON REAR AND BOTTOM OF TANK																																		
	CLEAN WATER PUMP SUCTION STRAINER*																																		
	SERVICE AUXILIARY HEAT SYSTEM*																																		
YEARLY MAINTENANCE SCHEDULE																																			
2 YR	REPLACE OIL COOLER*																																		

**NOTE: FREQUENCY MAY VARY DEPENDING ON NEED. IT IS THE USER'S RESPONSIBILITY TO ESTABLISH APPROPRIATE SERVICE INTERVALS.*

GROUND FORCE WORLDWIDE
WORLD'S FINEST MINE SUPPORT EQUIPMENT

OPERATION & MAINTENANCE MANUAL

TROUBLESHOOTING

GETTING STARTED	
Do you have copies of the electrical & hydraulic schematics?	Check manual or call Ground Force for copies of schematics.
To help you trouble shoot your Ground Force equipment, the Service Department will need to know your equipment's serial number. The Ground Force serial number may be located:	At the front head of the tank
	On a yellow tag inside the power panel
	In the front of the Operation & Maintenance Manual
	On a yellow tag on the driver's side of the truck

WATER TRUCK TROUBLESHOOTING

PROBLEM	CAUSES	SOLUTIONS
ELECTRICAL		
Blown fuses Tripped circuit breaker	Incorrect size.	Check the schematic and the manufacturer's recommendations to verify the correct size was installed in the circuit. Replace fuses with the correct size only. **⚠ CAUTION** **Fire or damage to wiring may occur if the wrong size is used.**
	Short in the circuit.	Identify the component the circuit is protecting. Examine the wires and connections for a pinched or grounded wire and repair as needed. Check for a failed component such as a coil, light, charger, motor, etc. Replace the component as needed. Replace the fuse or circuit breaker.
	Recent additions to the electrical circuit (such as fire suppression).	Adding power draws to a circuit will cause fuses or circuit breaker to burn out or trip. Remove the newly added circuit and place it on its own circuit, with its own fuse or circuit breaker and power source.
Hoist valve coils are burning out.	Current/voltage to the coil is too high.	Check the voltage to the hoist coil with the coil still connected. Check voltage across both the positive and negative terminals of the coil. The voltage should be between 9.5 and 12 volts at the hoist valve coil. If the voltage is different, call Ground Force at 1-208-664-9291 and request to speak with the Technical Communicator.
	The coil is incorrect.	Replace the coil with the recommended OEM coil.
	Electrical feedback to micro.	Add a diode to the coil to remove voltage feedback.

WATER TRUCK TROUBLESHOOTING

PROBLEM	CAUSES	SOLUTIONS
ELECTRICAL		
Water pump will not engage.	The low-level shut-off feature has turned off the pump.	Check the Water Control System display screen. If the water pump icon is red, the low-level shut-off is engaged. Add water to the tank.
	The low-level float switch has malfunctioned, or can't communicate with the micro-controller.	Test the wiring by placing a jumper wire across the connector going to the float switch. If the pump now starts, replace the low-level float. If it still does not work, check the wiring from low-level float to the micro. Repair as needed.
	The low-level float is installed in the wrong position.	Check the timing of the float to make sure the float is installed in the correct direction. The float switch should be installed normally open, with the float pointing down.
	The micro-controller has failed.	Call Ground Force and request the Technical Communicator for assistance with replacing the micro-controller.
	The hoist or diverter valve coil has no power.	The fuse is blown. Replace with the correct size fuse.
		Check for a short in the wiring, broken wire or bad connection. Repair or replace the wiring or connector as needed.
	The wire is connected to the wrong coil(s) on the hoist valve or the diverter valve.	Refer to schematics and correct the wiring on hoist or diverter valve coils.
Diverter valve coil or hoist valve coil has power, but water pump will not engage.	The coil or solenoid is bad.	Test the solenoid for magnetism. If the solenoid is magnetized, but will not activate the valve, then the solenoid may be bad. If the solenoid is not magnetized, the coil may be bad.
	Rigid frame chassis only: Hydraulic back-pressure at diverter valve is low or nonexistent.	Verify that a check valve is installed per print in the return line leaving the diverter valve. Verify the check valve is functioning properly and is not stuck open.

WATER TRUCK TROUBLESHOOTING

PROBLEM	CAUSES	SOLUTIONS
WATER PUMP		
The water pump motor is turning, but does not pump water.	The pump shaft or coupler is broken.	Replace the shaft or coupler.
	The coupler is not aligned correctly.	Correct the alignment. Refer to the Ground Force water pump parts drawings in the Parts and Schematics Manual.
	The operator is turning the pump on/off at high RPM, causing damage to the pump.	Replace the bad pump, coupler and/or motor as needed. Train the operators that the water pump should only be turned on at idle speeds. This can cause too much startup and shutdown torque on the water pump, coupler, and hydraulic motor.
	The water pump hydraulic motor has failed.	Replace the hydraulic motor. Refer to the Parts & Schematics Manual as well as the water pump manufacturer's manual.
	The water pump has a plugged impeller and/or volute.	Disassemble the water pump and remove any debris from the volute and impeller. Clean debris from the bottom of the tank. Pay special attention to the water pump suction screen in the bottom of the tank. Replace water pump if necessary.
	Water pump bearings are noisy or have seized.	Replace the water pump or the shaft, seals, and bearings, check the manufacturer's manual for the lubrication requirements.
Water pump seals are leaking.	Loose seal packing.	The water pump seals are designed to have some leakage, about 1 drop per second. Refer to the manufacturer manual for instructions to correctly adjust the seals.

WATER TRUCK TROUBLESHOOTING

PROBLEM	CAUSES	SOLUTIONS
SPRAY HEADS		
Spray head(s) have low to no flow. (Rigid frame trucks with ground speed control only.)	The water control system settings may be incorrect.	Set the spray mode to manual mode. Try the spray heads and if they spray normally, then the water control system settings may be set incorrectly. This setting is the speed (in MPH) at which you want to have 100% water flow to the spray heads. Refer to the Water Control System operations manual on how to set.
	Ground speed control is showing truck is moving while the truck is sitting still.	Realign the ground speed control radar. Check for obstructions in front of the radar lens.
	The connection to the ground speed is faulty and the radar under the truck is not communicating correctly.	Check the radar for misalignment, a bad fuse or damaged wiring. **NOTICE** **This is a 12-volt system.**
	The lens of the ground speed control radar is dirty.	Clean off the dirt and protect the lens from dirt as much as possible.
	The control coil or solenoid may be bad.	Check for a bad hydraulic cartridge(s) or coil on the diverter valve. Repair or replace as needed.
The spray head(s) have low to no flow.	The spray bar full of debris.	Remove the plugs on the end of the spray bar and remove debris. It may be necessary to remove the valve cover plate, diaphragm, spring and fan spray to clean out debris. Apply pipe sealant to plugs before reinstalling.
	There is a restriction or plugged screen on the suction side of the pump or in the pump's impeller fins.	Remove the suction line going to the water pump and check for debris. Check inside the tank to see if debris is obstructing the suction screen of the sump. Remove obstruction from the piping and screen.
	The water pump is too slow.	Set the chassis engine speed to full RPM (governed speed). If the pump is still running slowly, there may be a hydraulic issue. Refer to the HYDRAULICS section of this guide.
Excessive water flows back into the tank when the pump is running, and spray heads are closed.	Water hammer protection valve could be faulty.	Check the water pressure by connecting a pressure gauge to the spray bar, using a fitting on the inlet side of a spray valve. With the spray heads turned off, increase chassis engine RPM and check the water pressure. If it is below 60 PSI, check for a defective water hammer protection valve.
	Internal plumbing could be damaged.	Enter the tank and repair damaged plumbing. If the damage was caused by freezing, drain the tank and spray valves in the winter to prevent future damage. **⚠ WARNING** **Follow all safety requirements for entry and welding inside the tank.**

WATER TRUCK TROUBLESHOOTING

PROBLEM	CAUSES	SOLUTIONS
SPRAY HEADS		
The spray head stays on all the time or leaks with the engine shut off.	The valve has a broken spring, bad diaphragm, or seal, keeping the valve from being able to seal.	Drain the water in the tank below the spray head. Take the cover off the spray head and replace the bad spring, diaphragm or seat as needed, replace the cover.
	The valve has debris holding it open.	Check the spray valves for debris, and clean debris as needed. Check the spray bar for debris and clean as needed.
The spray head is spurting when the spray valve is off.	The hydraulic cylinder or hoses have air trapped in them.	Bleed the air out of the spray head cylinders and hoses.
	The spray heads do not have enough pressure supplied to the cylinders to hold them closed. Pressure reducing valve is set too low.	Adjust pressure reducing valve going to the spray head cylinders per print. 350 to 450 PSI is recommended. The seals on the cylinders have a 500 PSI rating. Do not exceed 500 PSI.
	If equipped with a diverter valve, it uses a small flow cartridge for control speed of the water cannon hydraulic motors. If pressure for the spray head valve bank is controlled using this flow-controlled source, the fluid flow does not hold the valves closed, resulting in water sputtering when other valves are operated.	Verify diverter valve ports A8 and B8 are not used to supply pressure to the spray head manifolds. These two ports must be used for the hydraulic water cannon to limit flow to the motors. Change the hydraulic connection as needed to ports C8 to E8.
	A bad or missing check valve going to upper side spray heads. (Articulated trucks only).	Replace or add a check valve going to the spray head manifold pressure port.

WATER TRUCK TROUBLESHOOTING

PROBLEM	CAUSES	SOLUTIONS
SPRAY HEADS		
Spray head(s) are not turning on.	The spray head is not selected on the Water Control System.	Select the desired spray head on the Water Control System display. See Water Control System Instructions.
	A fuse is blown.	Find the cause for the fuse blowing and repair. Replace fuse.
	No conductivity going to the solenoid.	Check the wire connectors for a broken or loose connection. Give a light tug on each wire in the plug to verify it is seated correctly. Repair as needed.
		Check the wiring for breaks and shorts. Repair as needed.
	The solenoid or coil is bad.	Check to see if the solenoid has magnetism by placing a screwdriver across the top of the solenoid if the solenoid has magnetism but the solenoid valve is not activating the solenoid may be bad. If the solenoid has no magnetism check the coil for resistance if no resistance replace the bad coil.
	The water pump is not creating enough pressure to open the spray head.	See the HYDRAULICS section of this guide to diagnose the problem.
	The diaphragm on the spray valve is leaking water into the valve cavity, keeping the diaphragm from opening.	To check, open the port on the front spray head cover below cylinder if water leaks out it indicates the valve's diaphragm is cracked. Replace the diaphragm in the spray head valve.
	The hydraulic cylinder seal is leaking and filling the valve cavity with hydraulic fluid, keeping the diaphragm from opening.	Open the port on the spray valve cover below the cylinder. If hydraulic fluid leaks out, it indicates the seal on the cylinder is leaking. Check hydraulic pressure going to the cylinder before replacing the cylinder and adjust the pressure as needed. Seals are rated at 500 PSI. Replace the hydraulic cylinder if necessary.
HYDRAULICS		
The pump and motor are turning but the pump is not pumping.	The direction of the motor is reversed and the pump is turning in the wrong direction.	Verify the pump is turning the correct direction. The rotation should be as follows: The impeller shaft should rotate in the direction from the smaller part of the water pump volute housing towards the larger part of the volute, where the water exits. If the rotation is incorrect, switch the rotation of the hydraulic motor. The motor rotation can be changed by disconnecting the hydraulic lines, unbolting the hydraulic motor from the mount, rotating the motor 180 degrees, then reinstalling the motor to the mount and reconnecting the hydraulic lines.

WATER TRUCK TROUBLESHOOTING

PROBLEM	CAUSES	SOLUTIONS
HYDRAULICS		
The water pump/motor is running too slow.	There is low hydraulic flow to the water pump motor.	Check the hoist pump's inline pressure filters. Check for a dirty filter, and replace filter cartridge as needed.
		Check the pressure and flow on the hoist pump. Excessive contamination or metal particles in the filter may indicate a worn hoist pump. Replace a bad or weak hoist pump as required.
	The water pump motor is weak.	Check the case drain fluid coming from the hydraulic motor. If flow is above 2 GPM, the hydraulic motor is failing. The water pump motor could be bad even if the case drain flow is less then 2 GPM.
The pump is hard to turn.	The bearings are worn out.	Replace the shaft/bearing and install new seals. Grease the bearings if equipped with serviceable bearings.
	The packings on the water pump are too tight.	Loosen the packing on water pump until you get about 1 drop per second.
	The water pump has debris in the pump keeping the impeller from turning.	Clean the debris from inside the pump as needed. Check the plumbing for rocks or other debris. Clean the sump screen, piping and vortex breaker as needed.
	Cold weather has caused water in the pump to turn to ice preventing the pump from turning.	Thaw out the truck. Drain any water before parking the truck, cover the fill chute so precipitation does not enter the tank. If the truck needs to have water in it (for fire protection for example), store the truck in a warm building.
The water pump is hard to prime.	An air pocket is trapped in the water pump, so the impeller is not able to move the water.	Open the water cannon valve while filling the water tank. Close it again before starting the water pump.
		Add a small hose from the top port of the water pump. Route the other end of the hose through a bulkhead back into the water tank.
		Position the truck on an incline facing uphill. Turn the water pump on and off as needed to prime the water pump.
The hydraulic system is overheating.	A hydraulic component(s) is defective and generating excessive heat.	Use an infrared temperature sensor to determine the heat source. Example: The hydraulic oil temperature when exiting the manifold assembly is about 10% higher than where it enters manifold. Something within that manifold may be the cause of the heat. Adjust or replace the cartridge that is producing heat. Usually, the heat is from a pressure relief valve needing adjustment or replacement.
	A valve is stuck, a seal has gone bad, or there is dirt or etched hydraulic paths in the manifold.	Check the cartridges for wear, dirt and sticking valves, and clean or replace as needed. Check the inside of the manifold for hydraulic etching past seals causing fluid paths in the manifold. Replace as needed.

WATER TRUCK TROUBLESHOOTING

PROBLEM	CAUSES	SOLUTIONS
HYDRAULICS		
The seal on the hydraulic motor driving the water pump is leaking.	The case drain is not connected, or is not correctly installed to the hydraulic tank, causing back pressure in the motor.	Verify the case drain is connected to the case drain port on the back of the hydraulic motor. Verify the case drain goes directly into the hydraulic tank as close as possible to the tank if using a tee.
	The case drain is installed going into the return line of the motor.	Relocate the case drain, so it drains directly into the hydraulic tank.
	The case drain hose is too small.	The case drain from the motor uses # 8 hose. If multiple hydraulic lines are used to return to the hydraulic tank, increase the case drain hose to size # 12 and drain directly into the hydraulic tank.
	The hydraulic motor is defective.	Replace the hydraulic motor.
WATER CANNON		
The water cannon butterfly valve is not closing all the way.	The butterfly valve may have a bent shaft from the valve being opened when it was frozen shut.	Check the butterfly valve for a bent shaft or arm and replace as needed. To prevent this from happening in the future, open the butterfly valve with the water pump off in cold weather to allow the water to drain from the water cannon.
		Install a recirculating line from the water cannon base back into the tank to help keep the water moving in the pipes, reducing the chance of freezing.
The butterfly valve is not opening/ closing.	The solenoid or coil is malfunctioning.	Check fuse, repair wiring and replace the fuse.
		Check the wire connectors for a broken or loose connection. Give a light tug on each wire in the plug to verify it is seated correctly. Repair as needed.
		Check to see if the solenoid has magnetism by placing a screwdriver across the top of the solenoid. If the solenoid has magnetism but the solenoid valve is not activating, the solenoid may be bad. If the solenoid has no magnetism, check the coil for resistance. If there is no resistance, replace the bad coil.
	A broken weld on the valve's pivoting arm.	Repair or replace as needed.

WATER TRUCK TROUBLESHOOTING

PROBLEM	CAUSES	SOLUTIONS
WATER CANNON		
The butterfly valve is not opening or closing.	A foreign object is stuck in the butterfly valve and is not allowing the valve to close all the way.	Remove any foreign object(s) from the valve.
	The electric actuator or hydraulic cylinder has failed or is not adjusted to open or close correctly.	Remove the cylinder from the arms on the butterfly valve. Verify the valve opens and closes all the way without the cylinder installed. Reinstall and adjust the arms so that when the cylinder is closed, the valve is fully closed. Replace cylinder if it is faulty.
	The micro open/close signal time not long enough.	Increase the micro's on/off time to allow the valve to open and close longer
		There may be a bad hydraulic solenoid, coil or actuator. Test and replace as needed.
The water cannon wireless remote is not working (Elkhart Brass).	The remote transmitter has no signal, or its battery is dead.	Check to make sure the remote is charged. Place the remote in the charger and close the charger. Does charging light come on? If no indicator light is on the docking station, check the fuse or circuit breaker and the wiring to the charger. Replace the charger or battery in the remote as needed.
	No blue light is showing on the water cannon receiver.	The receiver is not getting any power or is defective. Check the fuse or circuit breaker and wiring going to the receiver on the water cannon.
	The receiver is not programmed to the transmitter.	Follow the manufacturer's instructions to reprogram the receiver to the transmitter. Contact Ground Force for the instructions.
The hardwired water cannon is not working (Elkhart Brass).	No power, to the joystick, module or water cannon.	Check the wiring and the fuses or circuit breaker for the water cannon, joystick, and module. Repair and replace as required.
	No signal to the water cannon.	Check the wiring going to the module from the remote and to the water cannon. Make sure the wires are not pulled out, broken or shorted. Repair and replace the wiring as needed.

WATER TRUCK TROUBLESHOOTING

PROBLEM	CAUSES	SOLUTIONS
WATER CANNON		
The water cannon does not travel up & down or left & right, or operates erratically (Elkhart Brass).	The position sensor does not sense the location of the arm on the water cannon.	Replace the vertical and/or horizontal location sensor(s).
	A defective receiver module.	Replace the receiver module. Follow manufacturer's instructions for programming the receiver to the remote control.
The water cannon does not travel up & down or left & right (Hydraulic).	The hydraulic solenoid is not energizing.	Check for a bad fuse and verify the fuse size is correct. Repair the damaged wiring or defective valve. Replace the fuse.
		Check the solenoid to see if there is power to the coil, replace the coil or the solenoid if they are bad. If there is no power to coil, check for a short, broken wire or a bad connector and verify the coil is energizing. Repair or replace as needed.
		Check the wiring going to the joystick to make sure the wires are making good contact and the joystick is getting power, repair as required.
The water cannon moves too fast (Hydraulic).	The water cannon motor is receiving more than the rated 0.5 GPM flow.	Install or replace the flow control cartridge to limit the water cannon hydraulic motor flow to the 0.5 GPM.

GROUND FORCE WORLDWIDE
WORLD'S FINEST MINE SUPPORT EQUIPMENT

OPERATION & MAINTENANCE MANUAL

WARRANTY

LIMITED WARRANTY

A. GROUND FORCE MANUFACTURING, LLC (GFM) warrants that the specialty-equipment manufactured by (GFM), including accessory equipment and parts manufactured by (GFM), shall be free from:

1. Defects in material and workmanship furnished by (GFM) and used in the fabrication thereof;
2. Defects arising from the selection of materials or processes of manufacture;
3. Defects in the design thereof in view of the state of the art on the date hereof.

The foregoing warranty shall apply also to accessories, equipment, and parts manufactured to (GFM) detailed design and specifications and supplied to (GFM) by other manufacturers.

B. (GFM) makes no warranty with regard to component parts not manufactured by (GFM), but agrees to assign to the purchaser all of its rights under any original manufacturer's warranty covering such component parts and agrees to assist the purchaser in making such contacts with the manufacturer of such component parts as may be necessary to protect its right under the warranty covering them.

C. In case of defects in materials, defects in workmanship, defects arising from the selection of material or processes of manufacture, or defects inherent in the design, such defects must become apparent in the machine, accessory, equipment, or part manufactured by (GFM) within one calendar year or 5,000 hours of operations, whichever shall first expire after the equipment is commissioned by the original purchaser. It is required that the original purchaser complete the Product Registration Form within 45 days from the time the equipment is placed into service. Failure to complete the Product Registration Form will void the warranty. The date of commissioning must be within 12 months from the original date of invoice by GFM. The end-user must provide all information, which is relevant to the warranty, to GFM upon request. GFM reserves the right to determine what information is relevant.

   The extent of (GFM) liability under this warranty, as to defects in materials, defects in workmanship, defects arising from the selection of material or processes of manufacture, or defects inherent in the design, is limited to the repair of such defects, or to the repair or replacement (with a new or rebuilt similar item, free from the defect in question) of any accessory, equipment, or part manufactured by (GFM), which is defective in any such respects.

D. The (GFM) Limited Warranty does not cover, and (GFM) makes no warranty with respect to:

1. Defects not reported and defective items not returned to (GFM) within the warranty period;
2. Failure and damages due to misapplication, lack of proper maintenance, abuse, improper installation, or abnormal conditions of temperature, moisture, dirt, or corrosive matter;
3. Abrasion or wear, including that of wear-resistant liner packages in dump truck bodies;
4. Failure due to the operation, intentional or otherwise, in any improper manner;
5. Cracks, dents, bends or other damage resulting from impact or dragging;
6. Damage caused by components, or parts, or accessories built by others, or which were not manufactured, nor installed, nor sold by (GFM);
7. Any damage that results from continued use of equipment after a defect has become apparent;
8. Item(s) which have/has in any way been altered by anyone other than an authorized representative of (GFM);
9. Any damage which occurs during shipment, or otherwise, without the fault of (GFM);
10. Taxes, consumables, environmental fees, or surcharges;
11. Freight, transportation, or shipping;
12. Rental expenses;
13. Travel expenses, including travel labor, mileage, lodging, and meals;

E. (GFM) shall in no way be liable for any expenses incurred by the purchaser in any attempt to repair, replace, or rework any originally defective item of sale. (GFM) shall in no way be liable for any losses, costs, forfeiture or damages (including loss of profits, liabilities of the purchaser, its customers, or third persons, and all other consequential damages), whether direct or indirect, and whether or not resulting from, or contributed to by the default, or negligence of (GFM), its agents, employees, and subcontractors, which might be claimed as a result of the defect, use, or failure of the item delivered. Except as stated, there is no warranty, express or implied, in connection with the design, manufacture, sale, service or use of the machinery, accessories, equipment, and parts sold by (GFM). (GFM) liability on its warranty shall in no event exceed the cost of the item of sale.

This warranty policy supersedes, merges, and voids all negotiations, prior discussions, agreements, and understandings, whether oral or written. This warranty policy may not be altered or amended except by a document executed by officers of each party.

Effective September 16, 2020

DISTRIBUTOR WARRANTY POLICY

GROUND FORCE MANUFACTURING, LLC (GFM) will allow warranty claims for repairs on (GFM) manufactured equipment per the terms laid out in this warranty policy. All claims must follow the rules set forth in this policy; no other payment schedule will be recognized by (GFM). The proper procedure, including paperwork, must be followed for the warranty to be considered. The following warranty schedule will be applicable to distributors of Ground Force MFG. LLC products, along with their subsidiaries, affiliates, sister, and parent companies:

- Labor will be credited at 80% of the Distributor's prevailing in-shop service charge (at the time the repair is performed) up to, but not to exceed $80 per hour.
- A warranty job number must be assigned by (GFM) and referred to in any billing. The warranty job number expires 90 days from the date it is assigned by (GFM).
- All warranty labor hours are subject to review by (GFM) Product Support Department for validity. Excess labor hours charged due to Distributor's technicians' inexperience or lack of training on the servicing of (GFM) equipment is not covered under warranty.
- All warranty work, which may entail major repair of (GFM) equipment, is subject to being performed by (GFM) technicians dispatched from (GFM) plant rather than by Distributor's technicians. The decision whether to have (GFM) technicians perform said repair work is solely at the discretion of (GFM). Major repair work performed by Distributor without pre-approval from (GFM) is subject to claim denial.
- Warranty expenses incurred because of the failure of a component part used by (GFM) in the manufacture of equipment (GFM) builds is subject to coverage under the warranty of the component manufacturer in regard to the cost of the part, mileage, and to the labor cost for replacing it. (GFM) will submit non-GFM manufactured parts returned to (GFM) for warranty consideration to the component manufacturer; credit will be issued for the part if deemed payable by the component manufacturer (parts are billed for, when shipped, as per (GFM) Parts Warranty Policy).
- Warranty claims must be made on the GFM website, https://gfworldwide.com/warranty/. A detailed labor report will be required for warranty labor consideration.
- Claims arising from defects in materials, defects in workmanship, defects arising from the selection of material or processes of manufacture, or defects inherent in the design will be credited within 60 days from receipt of the warranty claim documentation at (GFM) if allowed.
- Warranty claims arising from component parts not manufactured by (GFM) will be credited per the respective manufacturer's warranty once the respective manufacturer has settled the claim.

This warranty policy supersedes, merges, and voids all negotiations, prior discussions, agreements, and understandings, whether oral or written. This warranty policy may not be altered or amended except by a document executed by officers of each party.

Effective September 16, 2020

WARRANTY PARTS

GROUND FORCE MANUFACTURING, LLC (GFM) utilizes parts made by many vendors. All vendor component parts have their respective manufacturer's warranties. (GFM) makes no warranty with regard to component parts not manufactured by GFM, but agrees to assign to the purchaser all of its rights under any original manufacturer's warranty covering such component parts, and agrees to assist the purchaser in making such contacts with the manufacturer of such component parts as may be necessary to protect its right under the warranty covering them.

HOW TO FILE A CLAIM

1. Locate the (GFM) serial number (six digits).
2. Prepare a PO for the replacement part and shipping
3. Call (GFM) at (208) 664-9291 with the serial number of your (GFM) equipment and the purchase order number and request to speak with the Parts and Product Support Representative for your area. Alternatively, you can also e-mail the serial number and purchased order number to the Parts and Product Support Representative for your area.
4. (GFM) will ship the part out to you, along with a Return Materials Authorization (RMA).
5. Replace the failed part and return it, along with the RGA, to the address instructed on the RGA.
6. Upon arrival, (GFM) will route the part to the appropriate vendor for warranty consideration.
7. The vendor will report their findings to (GFM) and either deny the claim or issue a credit.
8. (GFM) will forward the vendor's findings to you, the customer. If a credit is issued, by the vendor, (GFM) will pass the credit on to you by issuing a credit to your account.

Effective August, 2016

PRODUCT REGISTRATION

(Must be completed and submitted within 45 days of commissioning to activate warranty coverage)

Please visit our Web site to submit your product registration form online.

GROUND FORCE PRODUCT REGISTRATION